# CITY OF EUREKA, MISSOURI
# REVERSE OSMOSIS TREATMENT EVALUATION

**December 21, 2018**

**PREPARED FOR:**

CITY OF EUREKA
EUREKA, MISSOURI

**PREPARED BY:**

1719 Southridge Drive, Suite 100
Jefferson City, MO 65109

Gary Davis, PE
Project Manager

Project Number 19500.002

December 21, 2018

# CITY OF EUREKA, MISSOURI

## REVERSE OSMOSIS TREATMENT EVALUATION

**Areas of Responsibility**

Brian Hoellein, P.E.

All except Mechanical and Electrical

STATE OF MISSOURI
BRIAN L. HOELLEIN
NUMBER
E-27030
12/21/18
REGISTERED PROFESSIONAL ENGINEER

Jennifer McVey, P.E.

Mechanical and Electrical

STATE OF MISSOURI
JENNIFER L. McVEY
NUMBER
PE-2010007729
12/21/18
PROFESSIONAL ENGINEER

Project Number 19500.002

**Date:** November 6, 2018

**To:** City of Eureka, Missouri

**From:** Bartlett & West, Inc.

**Re:** Reverse Osmosis Treatment Evaluation

# Table of Contents

Section 1. EXECUTIVE SUMMARY ..... 1-1
Section 2. BACKGROUND ..... 2-1
Section 3. WELL PRODUCTION RATES AND DEMANDS ..... 3-1
3.1. Well Production Rates ..... 3-1
3.2. Water Demand ..... 3-2
Section 4. WATER QUALITY ..... 4-1
Section 5. RO SYSTEMS ..... 5-1
5.1. Reverse Osmosis / Nanofiltration Process Description ..... 5-1
5.2. Treatment Goals ..... 5-2
5.3. Conceptual Design ..... 5-3
5.4. Site Specific Conceptual Design ..... 5-4
5.5. Conceptual RO Equipment Costs ..... 5-5
Section 6. FINISHED WATER CORROSIVITY ..... 6-1
6.1. Blended Water Corrosivity ..... 6-1
6.2. Corrosion Control Options ..... 6-2
6.2.1 Aeration & Caustic Soda ..... 6-2
6.2.2 Phosphate Addition ..... 6-3
6.3. Corrosion Control Equipment ..... 6-4
6.3.1 Aeration ..... 6-4
6.3.2 Caustic Soda ..... 6-5
Section 7. WASTE DISPOSAL ..... 7-1
7.1. Sewer Line Impact ..... 7-1
7.2. Wastewater Treatment Plant Impact ..... 7-1
Section 8. ON-SITE STORAGE AND PUMPING ..... 8-1
Section 9. ELECTRICAL ..... 9-1
Section 10. SUMMARY OF IMPROVEMENTS BY SITE ..... 10-1
Section 11. COST ESTIMATES ..... 11-1
11.1. Construction Cost Estimates ..... 11-1
11.2. Operating Cost Estimates ..... 11-1
11.3. Impact to Water Rates ..... 11-1

## Appendices

Appendix A – Water Quality Data
Appendix B – RO Equipment Data
Appendix C – RO Floor Plans
Appendix D – Aerator Information
Appendix E – Pump Station Information
Appendix F – Site Drawings
Appendix G – Construction Cost Estimates
Appendix H – O&M Cost Estimates

## List of Tables

Table 3-1. Well Pumping Rates. ....3-1
Table 3-2. Water Demand ....3-3
Table 4-1. Updated Raw Water Quality Summary ....4-2
Table 5-1. Conceptual Membrane System Process Flows ....5-4
Table 6-1. Modeled Corrosivity Indices of Conceptual Finished Water ....6-2
Table 6-2. Modeled Caustic Soda Dosage for Conceptual Treatment Solution ....6-3
Table 6-3. Caustic Soda Feed Equipment Summary ....6-5
Table 6-4. Average Annual Caustic Soda Cost ....6-6
Table 8-1. Concept Finished Water Booster Pump Design ....8-1
Table 9-1. Electrical Motor Changes ....9-1
Table 9-2. Electrical Modifications Summary ....9-5
Table 10-1. Improvements Summary Matrix ....10-2
Table 11-1. Sumary of Opinion of Probable Cost ....11-2
Table 11-2. Summary of Estimated Impact to Operations Budget ....11-3
Table 11-3. Potential Impact to Water Rates ....11-4

## List of Figures

Figure 5-1. RO Membrane System Schematic - Wells 1, 5, & 10 ....5-6
Figure 5-2. RO Membrane System Schematic - Wells 6, 8, & 9 (Future) ....5-7

# Section 1. EXECUTIVE SUMMARY

The City of Eureka, MO operates a public water system (PWS) in the greater St. Louis metropolitan area, serving a population of about 10,000-plus commercial and industrial customers. The Eureka PWS includes six (6) wells located throughout the community; each well providing groundwater for its adjoining ion exchange (IX) water treatment plant (WTP). Softened potable water is disinfected and fluoridated at each WTP before entry into the City's distribution system. Bartlett & West completed an overall review of the system's water, titled "Water Quality Evaluation Report", dated May 10, 2018. That report identified elevated concentrations of chlorides, sodium, and TDS as probable contributors to concerns of taste and corrosion. This report focuses on providing the City with the necessary supplemental information regarding the option of including reverse osmosis (RO) membrane treatment to resolve those concerns.

An evaluation of membrane treatment was completed for each of the City's treatment facilities. The RO systems would replace the current ion exchange (IX) treatment processes. Doing so would address the concerns of hardness, TDS, and chloride, as well as provide a reduction of sodium in the finished water. The water quality of well 9 is regularly below identified goals of TDS and chloride, with hardness being addressed by the current IX system. Therefore, RO treatment for well 9 is not considered at this time. For RO treatment, the addition of a new building would be required for well site 6.

Concept level RO membrane equipment requirements for wells 1, 5, 6, 8, and 10 were developed. For plant sites without tanks (1, 5, and 10), new, small-volume wetwells and pre-manufactured booster pump stations will be required with RO treatment to provide the low back pressure required for the RO treatment systems. Electrical changes are required at each plant site where RO systems would be incorporated. Additional land use would be required to accommodate for this at well site 1.

The addition of caustic soda is also necessary for pH adjustments to create a finished water that is non-corrosive. Aeration is often coupled with caustic chemicals to achieve an optimal pH, which reduces the quantity of chemicals needed to achieve the pH goal. Separate recommendations on aeration equipment have been made for wells with and without tanks. In-tank types can be used at Wells 1, 5, and 10, while an induced draft type can be used at Wells 1, 5, and 10. A small new building to house the caustic feed system would be required for well site 9. The addition of antiscalant feed systems has also been recommended for wells 1, 5, 6, 8, and 10.

The main purpose of this Report is to develop a set of conceptual design criteria for adding RO membrane treatment and any associated work resulting from the addition. A regulator-approved pilot study is required before advancing the design.

Table 10-1 presents a summary of the various improvements needed for each site. Keep in mind that this list is for the key improvements and modifications needed. If the City moves ahead with implementing RO treatment, other items will surface during final design.

The opinion of probable project cost for the implementation of RO treatment systems at Wells 1, 2, 5, 6, 8, and 10, and changes at Well 9 is $10,497,500. Assuming a 20-year loan at 3% interest results in an annual payment of $705,600, which is $1.12/1,000 gallons based on a current annual overall water production of 628,000,000 gallons. The estimated additional cost to the City's water fund operating budget with additional labor is $277,000 ($0.44/1,000 gallons), and $144,000 ($0.23/1,000 gallons) without additional labor. A potential impact to water rates is shown on Table 11-3.

# Section 2. BACKGROUND

The City of Eureka desires to improve the quality of water provided to its customers in terms of improved taste and reduced corrosion. Bartlett & West completed a report entitled "Water Quality Evaluation Report", dated May 10, 2018, which identified elevated concentrations of chlorides, sodium, and TDS as probable contributors to the taste and corrosion concerns. Within that report, Appendix R proposed the use of reverse osmosis (RO) membrane treatment as a means of reducing chlorides, sodium, and TDS in the City's drinking water. A full and complete evaluation of membrane treatment was not part of the original report's scope of work, therefore the City requested Bartlett & West to provide additional information to weigh RO membrane treatment against other alternatives, such as an outside water source available to the City.

The information within this report is intended to provide the City with the necessary supplemental information to make an informed decision if comparing RO membrane treatment to other alternatives, including the status quo. To have a full understanding of the issues and costs associated with implementing a RO treatment system, a complete evaluation was completed for each of the City's six treatment facilities. The report establishes membrane treatment goals; discusses any post-treatment corrosion controls; addresses membrane waste disposal; summarizes required site improvements including storage, pumping, and electrical; and provides construction and operational cost estimates as well as impacts to water rates.

# Section 3. WELL PRODUCTION RATES AND DEMANDS

## 3.1. Well Production Rates

Bartlett & West worked with the City to verify the current well pumping rates (August 2018) and pumping rates prior to incorporation of the existing ion exchange (IX) treatment systems. The wells, in general, provided more flow prior to installation of IX treatment; the flow being decreased due to the additional headloss caused by the IX treatment system. Table 3-1 presents a summary of the production rates for each well. For the purposes of this report, well production rates prior to IX implementation will be used since substituting RO treatment for IX treatment will modify discharge head conditions, requiring installation of new well pumps. The table also shows the overall well production total and City's source water firm capacity (i.e., largest well off-line).

**Table 3-1. Well Pumping Rates**

| **Production Well** (City # and Name) | **Current Pumping Rate**[1] (gpm) | **Pre-IX Pumping Rate**[2] (gpm) |
|---|---|---|
| 1 (Howerton) | 830 | 900 |
| 5 (Drewel) | 860 | 1060 |
| 6 (Legends) | 460 | 600 |
| 8 (Viola) | 680 | 680 |
| 9 (Arbors)[3] | 800 | 800 |
| 10 (Ashton) | 480 | 580 |
| Total Capacity (gpm) | 4110 | 4620 |
| (24-hrs MGD) | 5.9 | 6.7 |
| Firm Capacity[4] (gpm) | 3250 | 3560 |
| (24-hrs MGD) | 4.7 | 5.9 |

*Notes:*

1. *Current production rates based on observations made August 14, 2018.*
2. *The production rate went down after installation of the IX equipment due to additional headloss.*
3. *Well #9 was always operated with IX equipment, so pre-IX processing rate is set equal to current rate.*
4. *Firm Capacity means largest well out-of-service.*



Bartlett & West
Driving Community and Industry Forward, Together.

## 3.2. Water Demand

Table 3-2 presents a summary of the individual well production and City total water demand for all of 2017 through October 2018. The City's source water production must be able to meet the peak day demand with the largest source (Well 5) out of service. At present, the City's firm source capacity of 4.7 MGD exceeds the peak day demand of 3.5 -3.7 MGD. However, 20 to 25 percent of the process flow feeding into a membrane system will be discharged as waste concentrate. Therefore, the excess firm source capacity will be reduced as additional well production will be diverted to waste. Section 5 discusses the resultant finished water amounts from each well with the addition of RO treatment.

## Table 3-2. Water Demand

### 2017

| Month | Well 1 | Well 5 | Well 6 | Well 8 | Well 9 | Well 10 | Total |
|---|---|---|---|---|---|---|---|
| JAN | 8,787,000.0 | 6,997,000.0 | 10,507,000.0 | 9,286,000.0 | 0.0 | 4,499,000.0 | 40,076,000.0 |
| FEB | 8,120,000.0 | 5,801,000.0 | 9,134,000.0 | 7,404,000.0 | 0.0 | 4,053,000.0 | 34,512,000.0 |
| MAR | 10,118,000.0 | 4,334,000.0 | 9,184,000.0 | 7,175,000.0 | 453,079.0 | 5,719,000.0 | 36,983,079.0 |
| APR | 7,410,000.0 | 8,033,000.0 | 10,229,000.0 | 6,995,000.0 | 1,332,520.0 | 3,984,000.0 | 37,983,520.0 |
| MAY | 11,758,000.0 | 12,598,000.0 | 8,308,000.0 | 9,323,000.0 | 457,539.0 | 7,132,000.0 | 49,576,539.0 |
| JUN | 17,141,000.0 | 17,892,000.0 | 13,410,000.0 | 10,139,000.0 | 724,700.0 | 9,711,000.0 | 69,017,700.0 |
| JUL | 23,249,000.0 | 20,468,000.0 | 14,717,000.0 | 12,601,000.0 | 2,187,000.0 | 13,312,000.0 | 86,534,000.0 |
| AUG | 17,143,000.0 | 19,597,000.0 | 14,942,000.0 | 10,852,000.0 | 1,562,000.0 | 10,110,000.0 | 74,206,000.0 |
| SEP | 13,381,000.0 | 17,399,000.0 | 14,285,000.0 | 10,724,000.0 | 1,692,000.0 | 7,878,000.0 | 65,359,000.0 |
| OCT | 10,800,000.0 | 11,821,000.0 | 14,477,000.0 | 9,647,000.0 | 1,143,000.0 | 5,002,000.0 | 52,890,000.0 |
| NOV | 7,715,000.0 | 8,364,000.0 | 7,598,000.0 | 7,833,000.0 | 468,000.0 | 4,047,000.0 | 36,025,000.0 |
| DEC | 8,508,000.0 | 9,319,000.0 | 5,493,000.0 | 7,974,000.0 | 226,000.0 | 4,655,000.0 | 36,175,000.0 |
| **Total (gpd)** | **144,130,000.0** | **142,623,000.0** | **132,284,000.0** | **109,953,000.0** | **10,245,838.0** | **80,102,000.0** | **619,337,838.0** |
| **Average (gpd)** | **394,877** | **390,748** | **362,422** | **301,241** | **28,071** | **219,458** | **1,696,816** |
| **Peak (gpd)** | | | | | | | **3,549,000** |
| **Peak to Avg. Day Ratio** | | | | | | | **2.09** |

### 2018

| | | | | | | | |
|---|---|---|---|---|---|---|---|
| JAN | 8,857,000.0 | 9,560,000.0 | 12,639,000.0 | 10,472,000.0 | 445,000.0 | 5,210,000.0 | 47,183,000.0 |
| FEB | 7,931,000.0 | 7,526,000.0 | 7,277,000.0 | 8,422,000.0 | 270,000.0 | 4,639,000.0 | 36,065,000.0 |
| MAR | 8,062,000.0 | 8,827,000.0 | 6,556,000.0 | 8,935,000.0 | 348,000.0 | 4,728,000.0 | 37,456,000.0 |
| APR | 6,786,000.0 | 9,489,000.0 | 7,422,000.0 | 9,514,000.0 | 868,000.0 | 5,018,000.0 | 39,097,000.0 |
| MAY | 12,099,000.0 | 13,729,000.0 | 11,421,000.0 | 10,210,000.0 | 1,322,000.0 | 7,111,000.0 | 55,892,000.0 |
| JUN | 17,659,000.0 | 18,776,000.0 | 14,474,000.0 | 9,225,000.0 | 2,337,000.0 | 9,239,000.0 | 71,710,000.0 |
| JUL | 21,425,000.0 | 22,842,000.0 | 15,880,000.0 | 11,146,000.0 | 3,170,000.0 | 12,205,000.0 | 86,668,000.0 |
| AUG | 15,609,000.0 | 16,556,000.0 | 16,321,000.0 | 10,048,000.0 | 2,189,000.0 | 8,733,000.0 | 69,456,000.0 |
| SEP | 13,638,000.0 | 14,459,000.0 | 11,953,000.0 | 9,411,000.0 | 1,834,000.0 | 7,720,000.0 | 59,015,000.0 |
| OCT | 10,365,000.0 | 11,381,000.0 | 12,093,000.0 | 9,195,000.0 | 1,417,000.0 | 5,314,000.0 | 49,765,000.0 |
| NOV | | | | | | | |
| DEC | | | | | | | |
| **Total (gpd)** | **122,431,000.0** | **133,145,000.0** | **116,036,000.0** | **96,578,000.0** | **14,200,000.0** | **69,917,000.0** | **552,307,000.0** |
| **Average (gpd)** | **402,734** | **437,977** | **381,697** | **317,691** | **46,711** | **229,990** | **1,816,799** |
| **Peak (gpd)** | | | | | | | **3,680,000** |
| **Peak to Avg. Day Ratio** | | | | | | | **2.03** |



Bartlett & West
Driving Community and Industry Forward, Together.

# Section 4. WATER QUALITY

One of the recommendations of the Eureka PWS Water Quality Evaluation Report (B&W, May 2018) was to conduct field jar testing to verify the caustic soda calculations presented in the report. Jar testing was completed by Hawkins, Inc. on 2 August 2018. Testing occurred on Wells 1, 5, and 6 to ascertain the amount of caustic soda necessary to raise the finished water pH (noted as around 7.7 the day of the jar testing) to a pH of 8.0. Another recommendation was for the City to collect another round of raw and finished water samples; this occurred on August 28, 2018. City operations staff also began collecting field data for select parameters in mid-August to further verify on-site pH conditions of the raw and finished water.

An important discovery made during the additional testing was the realization that field finished water pH at the wells appear to range from 7.07 – 7.58, averaging around 7.34 rather than the average of 6.90 calculated from the laboratory results used for the original report. Because pH is a logarithmic scale, a water of pH 7.34 is 2.75-times less acidic than a water with pH 6.90.

Updated water quality data is provided in Appendix A and average numbers are tabulated in Table 4-1. Analysis and recommendations within this report are based on this updated water quality information.

## Table 4-1. Updated Raw Water Quality Summary

| CONSTITUENTS | | RESULTS | | | | | |
|---|---|---|---|---|---|---|---|
| | | Well #1 | Well #5 | Well #6 | Well #8 | Well #9 | Well #10 |
| | | Raw | Raw | Raw | Raw | Raw | Raw |
| | | σ 2017-1028 | σ 2017-1028 | σ 2017-1028 | σ 2017-1028 | σ 2017-1028 | σ 2017-1028 |
| **Field Parameters** | | | | | | | |
| Temperature | °F | 60 | 59 | 62 | 61 | 60 | 60 |
| pH | | 7.30 | 7.26 | 7.41 | 7.32 | 7.32 | 7.39 |
| | | | | | | | |
| **Other Parameters** | | | | | | | |
| Solids, Total Dissolved | mg/L | 759 | 1220 | 1040 | 831 | 358 | 897 |
| Total Organic Carbon | mg/L | n.d. | n.d. | n.d. | n.d. | n.d. | n.d. |
| Turbidity | NTU | n.d. | n.d. | 0.3 | n.d. | n.d. | n.d. |
| | | | | | | | |
| **General Chemistry** | | | | | | | |
| Alkalinity, as $CaCO_3$ | mg/L | 280 | 294 | 272 | 273 | 299 | 288 |
| Calcium, total | mg/L | 79.6 | 106.1 | 84.5 | 85.9 | 61.1 | 91.3 |
| Chloride | mg/L | 238 | 516 | 458 | 316 | 26 | 333 |
| Fluoride | mg/L | 0.40 | 0.60 | 0.40 | 0.50 | 0.20 | 0.30 |
| Hardness, Total as $CaCO_3$ | mg/l | 337 | 433 | 362 | 371 | 246.5 | 380 |
| Iron, total | mg/L | n.d. | n.d. | n.d. | n.d. | n.d. | n.d. |
| Magnesium, total | mg/L | 33.6 | 40.9 | 36.8 | 38.1 | 22.7 | 36.9 |
| Manganese, total | mg/L | n.d. | n.d. | n.d. | n.d. | n.d. | n.d. |
| Nitrogen, Ammonia | mg/L | n.d. | n.d. | n.d. | n.d. | n.d. | n.d. |
| Nitrogen, Nitrate | mg/L | 0.7 | 0.6 | n.d. | n.d. | 0.6 | 0.6 |
| Sulfide, total | mg/L | n.d. | n.d. | n.d. | n.d. | n.d. | n.d. |
| Sulfate | mg/L | 37.2 | 62.6 | 42.6 | 46.5 | 24.1 | 44.2 |
| | | | | | | | |
| **Inorganics, Metals** | | | | | | | |
| Sodium, total | mg/L | 117 | 272 | 237 | 163 | 17.2 | 186 |
| | | | | | | | |

# Section 5. RO SYSTEMS

As discussed in the Eureka PWS Water Quality Evaluation Report (B&W, May 2018), the City's primary treatment process (ion exchange) is reducing the hardness but cannot reduce elevated levels of TDS and chloride as seen in the groundwaters of Wells 1, 5, 6, 8, and 10. (Well 9 does not exhibit elevated levels of TDS or chloride.) High TDS and chloride in drinking water may have a salty or brackish taste, result in scale formation, and decrease the efficiency of hot water heaters. Generally, TDS and chloride related water quality concerns are addressed using a membrane treatment process. Briefly discussed in the appendix of the original report, this section proposes a conceptual membrane process solution, as a replacement to the City's current ion exchange (IX) process, to address the identified water quality concerns of hardness, TDS, and chloride. Replacement of the IX treatment process with membranes will also result in the reduction of sodium in the finished water.

## 5.1. Reverse Osmosis / Nanofiltration Process Description

Reverse osmosis (RO) and nanofiltration (NF) utilize high pressures (125 to 250 psi) over a semi-permeable membrane surface to separate components of a fluid. RO / NF membrane technologies remove both monovalent ions ($Na^{+}$, $NO_3^{-}$, etc.) and multivalent ions ($Ca^{+2}$, $SO_4^{-2}$, etc.), however not all ions are removed with equal efficiency. For example, iron removal efficiency is typically 99% while nitrate removal efficiencies could vary from 60% - 90% depending on the membrane used. Generally, RO membranes are effective in removing both monovalent and multivalent ions whereas NF membranes are effective in removing only the multivalent ions associated with hardness. If only targeting hardness, NF membranes are the better solution as they require lower pressures to operate, therefore having a lower energy requirement. However, RO membranes are required if significant removal of TDS or monovalent ions is desired.

RO / NF membrane treatment systems have four primary process flows: feed, by-pass, permeate, and concentrate. These process flows may be seen on the conceptual RO treatment process arrangements shown on Figure 5-1 and Figure 5-2; with detailed discussion occurring in Section 5.3 and Section 5.4. RO / NF membranes separate the feed water into permeate and concentrate, but due to the high level of constituent removal in membrane permeate a portion of the feed water must be by-passed around the membranes to be blended with the membrane permeate at a controlled ratio in order to produce a final water meeting desired water quality goals. Although additional treatment on the by-pass is sometimes required to meet water quality goals, that does not appear to be the case for the conceptual membrane systems described in Section 5.3. An

antiscalant and/or acid is added ahead of the membranes treatment system to prevent scaling and fouling of the membranes; the composition and dosage of feed additives being determined by chemical analyses and pilot testing. The membrane concentrate is a waste product that requires appropriate disposal. Since the City's water treatment facilities are located within the City's sanitary sewer system the concentrate can be directly discharged to the City's sewer and is discussed in Section 7.

Common terms used in RO / NF membrane system design are array size, vessels, elements, permeate recovery, and flux rates. RO / NF array size relates to the capacity of the treatment system, with larger arrays (e.g., 16x8) processing more water. Arrays refer to the number of vessels in each stage; a 16x8 array consisting of 16 vessels sending concentrate to 8 more vessels for further treatment. Vessels typically consist of 5 to 7 membrane elements in a high-pressure container; fewer elements per vessel resulting in a smaller equipment footprint at the expense of treatment efficiency (i.e., permeate recovery). Six element vessels were selected for the conceptual membrane systems so that proposed equipment could fit into existing treatment buildings while maintaining a permeate recovery of 75% or better; meaning at least 75-gallons of permeate is generated for every 100-gallons of feed water. Flux is used to express the rate at which water permeates a RO / NF membrane, is directly proportional to temperature and pressure, and is established based on feed water quality and pilot testing. Flux rates as high as 17.0 gallons/ft$^2$/day (gfd) are possible for groundwater applications, however flux rates are generally downrated to reduce membrane fouling and cleaning frequency.

## 5.2. Treatment Goals

As shown on the updated water quality summary in Section 4 and the data compiled in Appendix A, hardness, TDS, and chloride are elevated in Wells 1, 5, 6, 8, and 10. For these wells, TDS ranges from 795 – 1300 mg/L, hardness ranges from 325 – 467 mg/L as $CaCO_3$, and chloride ranges from 212 – 544 mg/L. The water quality treatment goals used to develop the conceptual membrane systems proposed in Section 5.3 are:

- Hardness between 125 – 150 mg/L as $CaCO_3$
- TDS less than the MCL of 500 mg/L
- Chloride less than the MCL of 250 mg/L

Radionuclides were discussed in the Eureka PWS Water Quality Evaluation Report (B&W, May 2018) as part of the justification for installation of the existing IX softeners. Radionuclide exceedance is not discussed as a treatment goal in this report since pressure-driven membrane

separation processes, like reverse osmosis, have been identified by the USEPA as a "best available technology" for reducing radionuclide concentrations.

Membrane treatment for Well 9 is not being considered since TDS (352 - 364 mg/L) is regularly below the identified goal and chloride levels are near 25 mg/L. The raw water hardness of Well 9 (193 - 300 mg/L as $CaCO_3$) is currently being address with an existing IX system. If the raw water quality of Well 9 changes in the future, a membrane treatment system can be considered at that time.

## 5.3. Conceptual Design

Bartlett & West contacted two equipment manufacturers, HarnRO and $H_2O$ Innovation, for technical guidance and conceptual equipment proposals based on the water quality data summarized in Section 4 and the water quality goals outlined in Section 5.2. These concept level equipment proposals are presented in Appendix B. Both manufactures independently proposed Hydranautics ESPA-series RO membranes for their conceptual proposals, using two-stage vessel arrays that vary from 10x5 to 16x8 with six (6) RO elements per vessel, average flux rates ranging from 12.0 – 15.0 gfd, and permeate recovery between 75% - 80%.

Table 5-1 provides a summary of process flow rates and blended finished water for a conceptual membrane design based on performance projections provided by the equipment manufacturers. This table presumes installation of a unique membrane system at each treatment facility with the goal of maximizing blended water production. A regulator-approved pilot study is required before advancing the conceptual designs presented herein into preliminary designs based on field tested membranes, flux rates, and permeate recovery. The balance of capacity needs, treatment goals, operation and maintenance costs, capital costs, and regulatory concerns will undoubtedly result in a final design with process flows differing from the conceptual flows presented in Table 5-1.

**Table 5-1. Conceptual Membrane System Process Flows**

| Production Well | | RO Membrane System[2] | | | By-Pass[3] | | Finished Water | | | | |
|---|---|---|---|---|---|---|---|---|---|---|---|
| Number | Source[1] (gpm) | Feed (gpm) | Conc. (gpm) | Permeate (gpm) | Flow (gpm) | Flow[4] (%) | Flow (gpm) | Flow[5] (%) | Blended Hardness | Blended TDS | Blended Chloride |
| 1 | 900 | 625 | 156 | 468 | 275 | 31% | 744 | 83% | 125 | 301 | 88 |
| 5 | 1060 | 815 | 204 | 611 | 245 | 23% | 856 | 81% | 125 | 385 | 148 |
| 6 | 600 | 431 | 108 | 323 | 169 | 28% | 492 | 82% | 125 | 385 | 157 |
| 8 | 680 | 494 | 124 | 371 | 186 | 27% | 556 | 82% | 125 | 301 | 106 |
| 9 | 800 | No Change to IX Treatment Due to Raw Water Quality | | | | | 800 | 100% | 108 | 419 | 42 |
| 10 | 580 | 425 | 106 | 319 | 155 | 27% | 474 | 82% | 125 | 318 | 109 |
| | | | | | **Total Capacity** | | 3922 | gpm | | | |
| | | | | | | | 5.6 | MGD | | | |
| | | | | | **Firm Capacity[6]** | | 3066 | gpm | | | |
| | | | | | | | 4.4 | MGD | | | |

Notes:

1. Well production rates based on pre-IX pumping rates shown in Table 3-1, except Well 9 which is current produciton rate.
2. Permeate recovery of 75% assumed.
3. By-pass flow rates calculated so that the blended, finished water would achieve the desired water quality shown on table.
4. By-pass flow as percent of source flow.
5. Finished water flow as percent of source flow.
6. Firm Capacity means largest source out-of-service.

The total finished water capacity incorporating RO treatment at the 5 noted wells plus Well 9 is 5.6 mgd, and the firm capacity is 4.4 mgd. The firm capacity exceeds the peak day demands of 3.5 -3.7 mgd, as noted in Section 3.

## 5.4. Site Specific Conceptual Design

Concept floor plans were developed for treatment buildings associated with Wells 1, 5, 8, and 10 based on general dimensional information provided by equipment manufacturers and are included in Appendix C. The concept floor plans show how a single RO treatment unit, using 6-element pressure vessels, can be placed in existing buildings. Membrane treatment equipment installation will require replacing the existing wall block-out at Wells 1, 5, and 8 with an overhead door. This is needed for both initial installation and to provide access for membrane system maintenance. The building at Well 10 already has an overhead door that will facilitate initial installation and system maintenance. Final layout will be determined during final design if the City chooses to move down this path. The floor plans with the membrane skid oriented a "straight" orientation as shown in Options 1 and 3 seem the most practical at this time, and provide the most space for the additional antiscalant, and caustic soda feed systems.

The existing IX treatment building at Well 6 is not large enough to accommodate retrofitting for membrane treatment. Furthermore, site constraints prevent lengthening of the building, and widening the building would encroach on the access driveway. Therefore, a new building will be required if membrane treatment is desired for Well 6. The concept floor plan for this proposed building can be found in Appendix C. Because of the deteriorating physical condition of the existing chemical feed building at Well 6, the proposed treatment building concept includes rooms to accommodate relocation of the existing chloride and fluoride feed equipment. If the City decides to move forward, many details will need to be worked through and developed during final design for a new treatment building at this location.

## 5.5. Conceptual RO Equipment Costs

Budget costs received from equipment manufacturers are at a concept level, serving a general basis for the anticipated cost. Once pilot testing is completed and specific design is completed for each site, the equipment would be secured through a procurement process at the beginning of final design. By going through the procurement process the City gets more input on which manufacture to move forward with and the manufacture becomes part of the design team, so the design can be developed around the specific equipment to be suppled. The concept level costs from manufacturers ranged from $215,000 to $535,000 per skid with an average cost of $375,000. The estimated cost for the Clean-In-Place (CIP) equipment needed to periodically remove membrane fouling is estimated to be around $80,000. Since the City would have multiple sites, the equipment would be mounted on a trailer, so it could be used at all the treatment sites.

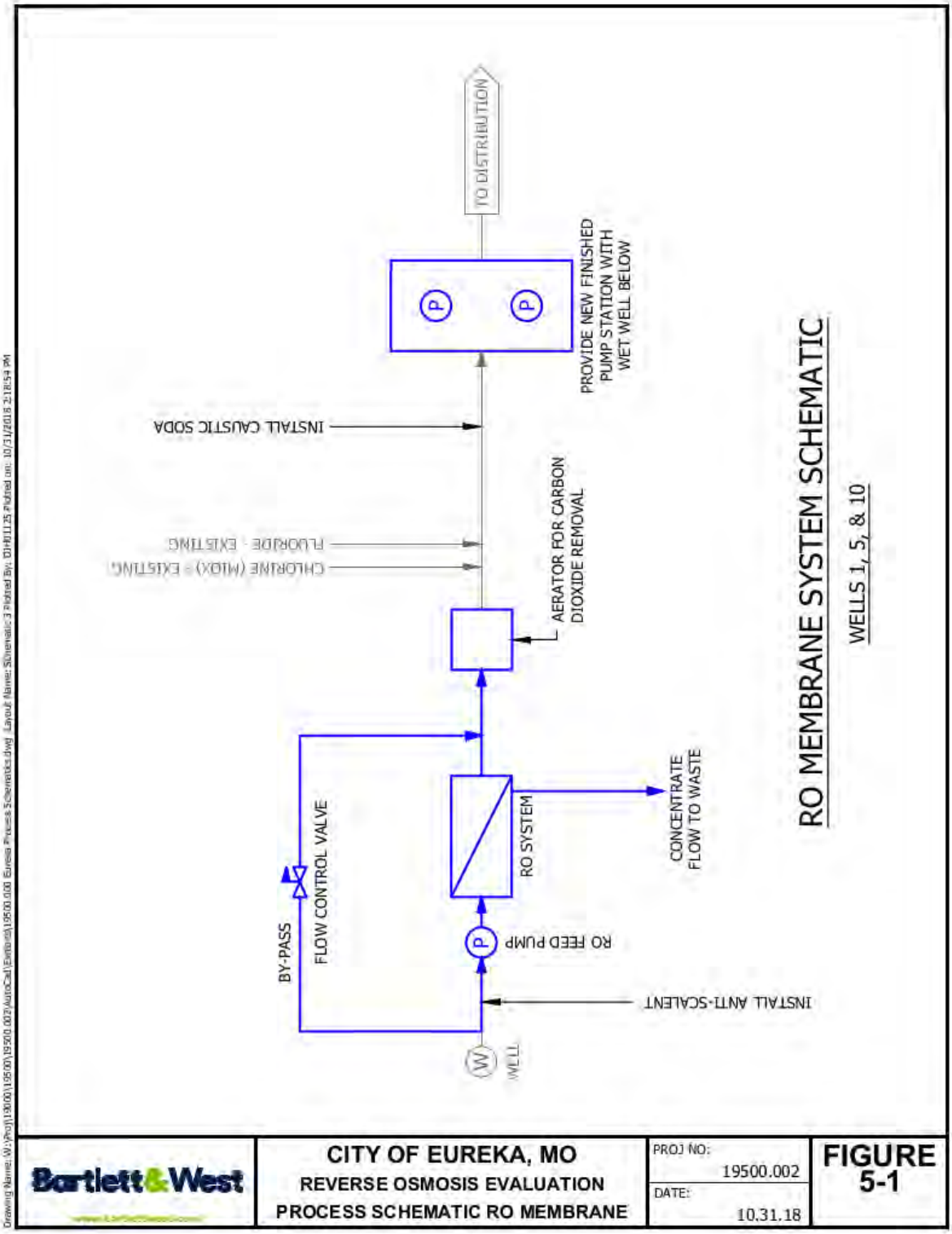




Bartlett&West
Driving Community and Industry Forward, Together.

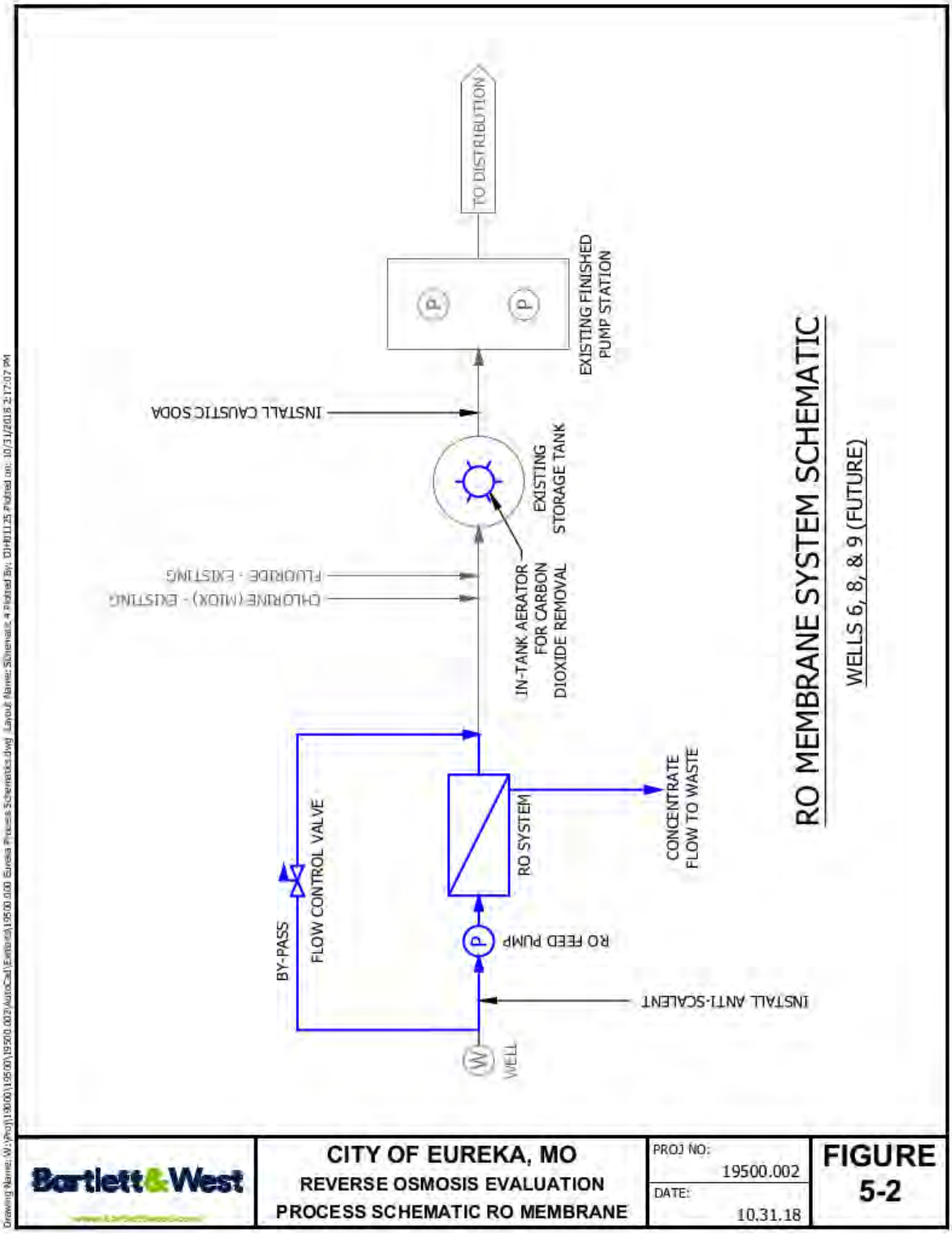




Bartlett & West
Driving Community and Industry Forward, Together.

# Section 6. FINISHED WATER CORROSIVITY

As discussed extensively in the Eureka PWS Water Quality Evaluation Report (B&W, May 2018), corrosion is a complex series of oxidation/reduction reactions that return refined or processed metal into a stable ore state. In the context of drinking water distribution systems, corrosion occurs between the carried product (drinking water) and the wetted surface of carrier material (pipe, valve, meter, etc.) A drinking water is referred to as corrosive if its chemical characteristics promote galvanic activity, such as: dissolution of protective barriers on metallic surfaces, preventing the formation of passivating films, and insufficient suppression of microbial growth. While there is no single indicator of a water's corrosive tendencies, there is a collection of correlative indices that can be aggregated to provide a preponderance of evidence for or against corrosive tendencies. The following correlative indices were discussed and used in the earlier water quality report: Langelier Index (LI), Calcium Carbonate Precipitation Potential (CCPP), Aggressiveness Index (AI), Ryznar Stability Index (RSI), Larson-Skold Index (LSI), and the Chloride-to-Sulfate Mass Ratio (CSMR).

## 6.1. Blended Water Corrosivity

The Missouri Department of Natural Resources (DNR) requires (Section 4.3.2.2 of the Minimum Design Standards for Missouri Community Water Systems, 2013) that finished water produced by RO / NF membrane technologies be noncorrosive "in order to meet lead and copper action levels and to prevent sorption of other regulated contaminants." To ascertain the corrosive tendencies of the blended by-pass and permeate streams, water quality modeling programs were used to project how efficiently the membrane system removes feed water constituents, calculate the final concentration of constituents in the blended stream for each wellsite, then model the corrosive indices of the finished water of each treatment system.

The results, presented in Table 6-1, indicate the finished water modeled, the date range of field sampling used to generate the model, and a color-coded output of modeled corrosion indices. Indices suggesting a moderately aggressive water are colored red. Indices suggesting a strongly aggressive water are bolded and colored red. Inspection of Table 6-1 indicates that the conceptual finished water from all six treatment sites is moderately to strongly aggressive toward carbonate equilibrium (AI, RSI, LI) as well as galvanic corrosion (CSMR). Typical of membrane softening, the blended water becomes notably more aggressive with respect to carbonate equilibrium as RO / NF membranes do not remove dissolved gasses, like acidic carbon dioxide ($CO_2$). Carbonate

equilibrium is quickly established by aeration ($CO_2$ removal) and/or chemical addition (pH adjustment with caustic soda). These approaches are discussed further in Section 6.2.

**Table 6-1. Modeled Corrosivity Indices of Conceptual Finished Water**

| Sample Information | | Modeled Water Quality | | | | | | |
|---|---|---|---|---|---|---|---|---|
| Name / ID | Date | $CO_2$ (mg/L) | Aggressive Index | Ryznar Index | Langelier Index | CCPP mg/L | Larson-Skold | CSMR |
| | | | | | | | | |
| Eureka Well #1, RO Blend | σ Aug 2018 | 41.9 | 10.5 | **9.44** | **-1.40** | -71.4 | 0.67 | 7.06 |
| Eureka Well #5, RO Blend | σ Aug 2018 | 68.1 | 10.3 | **9.78** | **-1.64** | -112 | 0.42 | 8.04 |
| Eureka Well #6, RO Blend | σ Aug 2018 | 29.5 | 10.6 | **9.36** | **-1.27** | -52.5 | 0.39 | 10.74 |
| Eureka Well #8, RO Blend | σ Aug 2018 | 27.5 | 10.7 | **9.23** | **-1.18** | -47.7 | 0.58 | 6.62 |
| Eureka Well #9, IX Finished | σ Aug 2018 | 39.3 | 11.7 | **7.61** | -0.20 | -15.6 | **3.94** | 1.72 |
| Eureka Well #10, RO Blend | σ Aug 2018 | 34.8 | 10.6 | **9.39** | **-1.30** | -60.3 | 0.58 | 7.36 |
| | | | | | | | | |

## 6.2. Corrosion Control Options

There are two common post-treatment processes used after RO / NF membrane systems to reduce finished water corrosivity: aeration and caustic soda addition. In some cases, the addition of additional corrosion inhibitors (e.g., polyphosphate) is needed to address persistent galvanic corrosion in the distribution system. These corrosion control options are discussed herein.

### 6.2.1. Aeration & Caustic Soda

Because it is a gas dissolved in water, $CO_2$ can be stripped from water by aeration. The removal of $CO_2$ from water results in a change to the water's carbonate equilibrium, causing an increase in the pH of the water. Aeration is a common post-treatment process used after membrane softening processes to reduce the aggressiveness (corrosivity) of finished drinking water. Aeration is often coupled with the addition of caustic chemicals (sodium hydroxide, soda ash, etc.) to achieve an optimal pH – the aeration step reducing the quantity of chemicals needed to achieve the pH goal. Based on the calculated $CO_2$ content of finished waters (Table 6-1), aeration followed by caustic addition appears to be a reasonable option to produce a regulatory-required noncorrosive finished water.

Aeration can be accomplished by various types of equipment that have varying degrees of CO2 removal expectations. In this case the in-tank type planned for use at Wells 5, 8, and 9 is estimated to provide around a 50% removal. An induced draft type can be used at Wells 1, 5, and 10 with an estimated 80% removal. The equipment is discussed further in Section 6.3.

After modeling $CO_2$ removal, caustic soda dosage was modeled to optimize carbonate equilibrium indices (AI, RSI, LI), resulting in a caustic soda dosage range of 7 – 14 mg/L as shown on Table 6-2. Annual chemical costs and equipment associated with the caustic feed is described in Section 6.3.

**Table 6-2. Modeled Caustic Soda Dosage for Conceptual Treatment Solution**

| Well | Modeled Treatment System | Presumed $CO_2$ Removal | Modeled 100% Caustic Dosage (mg/L) |
|---|---|---|---|
| 1 | Conceptual RO | 80% | 7 |
| 5 | Conceptual RO | 80% | 12 |
| 6 | Conceptual RO | 50% | 14 |
| 8 | Conceptual RO | 50% | 12 |
| 9 | Existing IX | 50% | 10 |
| 10 | Conceptual RO | 80% | 7 |

### 6.2.2. Phosphate Addition

Phosphate-based corrosion inhibitors are generally proprietary blends of orthophosphates and polyphosphates that are selected to address identified quality concerns based on laboratory water quality analyses. Primarily, phosphates are used to "sequester" undesirable metals by forming metal-phosphate complexes: calcium and manganese complexes are unable to form scale, copper and lead complexes precipitate onto pipe surfaces, and iron and manganese complexes do not color water. Phosphates can also form a thin, electrolytic passivation layer on the metals commonly used in drinking water distribution systems and households (e.g., aluminum, iron, steel, zinc) preventing galvanic corrosion. Phosphates are generally most effective over a defined pH range and when ortho/poly-blend ratios can be maintained throughout the distribution system. Time and temperature will revert longer-chain polyphosphates to short-chain polyphosphates and orthophosphate in a process called hydrolysis. Reversion rates are minimized by maintaining a low water age in the distribution system, however it is important to recognize that unmanaged phosphate decomposition can lead to insufficient sequestration, increased corrosion, and promote biofilm growth.

The use of phosphate-based corrosion inhibitors was discussed in a Bartlett & West memorandum to the City, dated 11 September 2018. In that memorandum, the electrolytic passivating abilities of a polyphosphate-based inhibitor, such as Aqua Smart SeaQuest®, was mentioned as providing some benefit with respect to consumer complaints of household

appliance corrosion. While corrosion inhibitor use may provide some benefit to the public, RO membrane treatment is required to addresses the high levels of TDS, chlorine, and sodium in the City's existing drinking water. If the City decides to pursue membrane treatment, interim addition of polyphosphate-based corrosion inhibitors should be considered. However, the need for inhibitor addition is not anticipated once membrane treatment is installed, but should be reassessed again at the time of final design.

## 6.3. Corrosion Control Equipment

### 6.3.1. Aeration

For WTP sites with on-site storage tanks, Medorda Corporation has an in-tank aeration system (GridBee® In-Tank THM/VOC Removal System) developed to remove THMs and VOCs by aeration. In general, the system consists of an in-tank low head pump to bring water from the bottom of the tank up through spray nozzles at the water surface. The pump runs continuously to aerate the water as well as providing some level of tank mixing. If needed, an in-tank mixer can also be included. Conversations with the manufacture indicate the THM/VOC removal system would be able to remove approximately 50% of the dissolved $CO_2$. The aeration system would utilize a 15-hp motor as well as a 2-hp blower mounted on the top of the tank. The blower forces air into the tank with the air escaping out through the tank vent, creating air movement to remove the degassed $CO_2$ from the tank headspace. Information on the in-tank aeration system can be found in Appendix D. The probable equipment cost for a GridBee® SN15 unit, installed by the manufacture, is $93,000 per tank.

For those WTP sites where a new wetwell and finished water booster station must be installed, the concept design is to extend the wetwell length, and place an induced draft aeration system on top. The concept plans for these new booster stations located in Appendix E, show the induced draft aerator. Information on the induced draft aeration system can be found in Appendix D. The concept level budget for the aeration system equipment is $40,000 to $50,000 depending upon the process flow rate.

### 6.3.2. Caustic Soda

In general, the caustic soda feed system would consist of the following components at each water treatment plant site.

- Bulk storage tank
- Transfer pump
- Day tank and scale
- Chemical feed pump
- Chemical spill containment either a containment curb/sump or a double wall bulk tank. Given the limited space available for the purposes of this report, double wall tanks are included.
- If purchased at 50% strength, then a system to dilute from 50% (Purchased) to 30% (Feed) in the day tank is required.

Table 6.3 presents a summary of the feed dosage as 100% caustic soda, feed rate at 30% caustic soda, and bulk storage tank as 30% caustic soda.

**Table 6-3. Caustic Soda Feed Equipment Summary**

| Well No. | #1 | #5 | #6 | #8 | #9 | #10 |
|---|---|---|---|---|---|---|
| Finished Water Capacity (gpm) | 744 | 856 | 492 | 556 | 800 | 474 |
| Avg processing hrs/day (hrs) | 9.20 | 8.68 | 12.90 | 9.59 | 0.98 | 8.32 |
| **Aeration + Caustic** | | | | | | |
| Dosage @ 100% souln. (mg/L) | 7 | 12 | 14 | 12 | 10 | 7 |
| Feed Rate @ 30% (gph) | 0.8 | 1.5 | 1.0 | 1.0 | 1.2 | 0.5 |
| Bulk Tank Size @ 30% (gal) | 250 | 500 | 500 | 300 | 300 | 200 |
| Day Tank Size @ 30% (gal) | 20 | 40 | 40 | 30 | 30 | 10 |


Bartlett & West
Driving Community and Industry Forward, Together.

Caustic soda with solution strengths of 50% and above will start to crystalize at a temperature around 45 degrees. Therefore, when larger volumes are required it is common to purchase at 50% (buying less water) then dilute on-site for ease of feeding. However, the storage area must be heated to maintain a temperature above 55 degrees. With the addition of the RO treatment, and incorporation of aeration it may now make sense to purchase caustic soda at 30% so on-site dilution is not required which will make operation safer and easier. Table 6-4 presents a summary of project annual cost for caustic soda purchased at 30 and 50 percent. Thirty (30) percent is used in the O&M cost estimates included in Section 11.

**Table 6-4. Average Annual Caustic Soda Cost**

| | Aeration & Caustic Feed | |
|---|---|---|
| **Well No.** | **30% Solution** | **50% Solution** |
| **1** | $11,090.46 | $7,172.12 |
| **5** | $20,657.49 | $13,359.06 |
| **6** | $20,573.15 | $13,304.51 |
| **8** | $14,824.69 | $9,587.03 |
| **9** | $1,807.22 | $1,168.71 |
| **10** | $6,393.35 | $4,134.53 |
| **System Total** | $75,346.35 | $48,725.96 |

# Section 7. WASTE DISPOSAL

## 7.1. Sewer Line Impact

Presently, the regeneration of waste from the existing IX treatment units is discharged to the City's sanitary sewer system. The waste flows by gravity to the City's wastewater treatment facility, and thus there are no lift stations involved with the discharge disposal. The regeneration waste flow rate varies from 190 to 320 gpm depending upon the specific well.

As noted in Section 4, the concentrate flow rate generated will be in the range of 20 to 25 percent of the RO feed system flow rate. Thus, when the RO system is in operation the concentrate flow rate will be in the range of 80 to 165 gpm, depending upon the specific well and final recovery rate as determined during final design. The concentrate flow rates are about half the rate presently produced during the IX regeneration. Thus, there should be no waste disposal problems as related to the gravity sewer pipelines.

## 7.2. Wastewater Treatment Plant Impact

A concentrate flow of 20 to 25 percent of the RO feed system flow results in an average day city wide overall concentrate volume of 270,000 to 390,000 gallons per day. This volume will be an increase in the hydraulic loading at the City wastewater treatment facility but would not contain any biological loading to the plant. The concentrate will dilute with other wastewater generated throughout the City on its way to the wastewater plant. Thus, constituents such as hardness, TDS, and chloride are expected to be at levels similar to what they are today, they simply have by-passed the domestic water system on their way to the wastewater treatment plant.

The wastewater treatment facility currently receives about 1.6 mgd of flow and has a rated capacity of 2.8 mgd. The influent pumping facility, located at the wastewater treatment plant has a capacity of around 5 mgd. Thus, the existing facilities can hydraulically handle the additional RO concentrate flow. However, the RO concentrate flow will take up growth capacity, thus requiring an expansion sooner than if that flow was not being received at the wastewater facility.

It is Bartlett & West's understanding that the existing facility has a requirement to remove 85% of the incoming Biological Oxygen Demand (BOD) and Total Suspended Solids (TSS), and that at times the plant struggles to reach those requirements. It is not within the scope of this project to get into the details of how to resolve this issue, and it is recommended that the City commission a study of the wastewater treatment facilities looking at the current situation and upcoming

potential changes to the discharge requirements. During that study the potential additional hydraulic flow from RO treatment systems at the wells should be accounted for. Modifications to meet discharge requirements appear to be necessary with or without potential RO concentrate flow.

# Section 8. ON-SITE STORAGE AND PUMPING

Reverse Osmosis treatment systems cannot discharge into back pressures much over 20 psi. Thus, at plant sites 6, 8, and 9 (Future), the RO system would discharge into the existing on-site tanks as is currently the case. Water is then pumped out of those tanks to the distribution system via the booster pump stations located at those plant sites. No changes are needed to the tanks and booster pump stations, except for the addition of in-tank aeration equipment for $CO_2$ stripping, additionally discussed in Section 5.

However, for plant sites 1, 5, and 10 new small volume wetwell and new pre-manufactured booster pump stations will be required. Flow from the RO system would flow through a ground level aerator for $CO_2$ stripping, and into a wetwell located below the aerator and booster pump station. Water would be withdrawn from the wetwell with vertical turbine pumps. It is anticipated that a pre-manufactured booster station would be utilized, although a site-built station could be utilized. It is currently anticipated the wetwell would have a maximum water depth of around 9 feet. The finished water pump(s) would be operated via variable frequency drives to maintain a constant water level in the wetwell. Thus, the finished water pumps would operate continuously while the adjacent plant is operating. A summary of the concept design for the booster stations is shown in Table 8-1.

**Table 8-1. Concept Finished Water Booster Pump Design**

| | Well No. | | |
|---|---|---|---|
| | 1 (Howerton) | 5 (Drewel) | 10 (Ashton) |
| Design Flow per Pump (gpm) | 774 | 462 | 473 |
| Design Head (ft) | 185 | 243 | 231 |
| Design HP per Pump | 50 | 40 | 40 |
| Number of pumps running | 1 | 2 | 1 |
| Number of standby pumps | 1 | 1 | 1 |

A concept plan view for the finished water booster station, and manufacture's information is located in Appendix E. The concept cost for the pre-manufactured booster station, not including the wetwell or installation, is in the range of $285,000 for the duplex stations (each), and $350,000 for the triplex station.

# Section 9. Electrical

The various treatment process and pumping changes identified for each site will require electrical modifications. Principal changes and modifications include:

- Wells 6 and 8 would have new pumps and motors installed to provide a higher discharge pressure. Thus, the motor horsepower will increase resulting in the need to modify the electrical equipment serving the well motors.
- To maintain a consistent inlet feed pressure to the RO system, variable frequency drives (VFDs) will be installed on each well pump.
- New VFDs, electrical connections, associated wiring and conduit to the new finished water booster stations at plant sites 1, 5, and 10.
- New electrical connections, associated wiring and conduit to the new aeration system at each plant site.
- Provide electrical distribution equipment, lighting, power, heating, and ventilation for the potential new treatment building at Well 6.
- Modify electrical services, and generators as discussed on the following pages.

Table 9-1 presents a summary of the principle electrical motor modifications at each plant site.

**Table 9-1. Electrical Motor Changes**

| | Well No. | | | | | |
|---|---|---|---|---|---|---|
| | 1 (Howerton) | 5 (Drewel) | 6 (Legends) | 8 (Viola) | 9 (Arbors) | 10 (Ashton) |
| Existing Well Pump (Hp) | 100 | 100 | 100 | 125 | 100 | 100 |
| Well Pump w/ RO Modifications (Hp) | Same Pump Install VFD | Same Pump Install VFD | 125 w/ VFD | 150 w/ VFD | No Change EX Treatment to Remain | Same Pump Install VFD |
| RO Feed Pump - On RO Skid (Hp) | 50 | 50 | 30 | 30 | | 30 |
| Aerator (Hp) | 0.5 | 0.5 | 15 | 15 | 15 | 0.5 |
| Blower (Hp) | N/A | N/A | 2 | 2 | 2 | N/A |
| Finished Water Pumps (Hp) | 50 | 40 | No Change | No Change | No Change | 40 |
| Number of Pumps Running | 1 | 2 | No Change | No Change | No Change | 1 |
| Number of Standby Pumps | 1 | 1 | No Change | No Change | No Change | 1 |



Bartlett & West
Driving Community and Industry Forward, Together.

The addition of the RO Feed Pump, Aeration System, and Finished Water Pumps listed in Table 9-1 above require electrical service and distribution equipment modifications at each plant site. The modifications at each site are as follows:

- Well No.1 (Howerton)
    - The existing 200 Amp, 480 Volt, 3-phase electrical service will need to be upsized to 600 Amps to accommodate the additional loads. A new utility transformer, meter, and associated feeders will be required. A new 600 Amp main disconnect switch will be provided with 500 Amp fuses.
    - The existing 150 kW (kilo-watt) generator and automatic transfer switch will be replaced with a new 300 kW generator, 600 Amp transfer switch, associated conduit and wiring.
        - The existing 150 kW generator could remain if the existing 150 kW generator from Well No. 5 was relocated to Well No. 1. The (2) 150 kW generators could operate together in parallel to provide backup power. This would eliminate the need for the City to purchase and install a new 300 kW generator at this location, or the 500 kW generator from Well 8 could be moved.
    - The existing 175 Amp distribution panel will be replaced with a new 600 Amp main distribution panel (MDP). The existing brine pump, HVAC equipment, rectifier, well pump, lighting, and receptacles will be reconnected to the new MDP. The new RO Feed Pump, Finished Water Pumps, and Aerator will be fed from the new MDP.
- Well No. 5 (Drewel)
    - The existing 200 Amp, 480 Volt, 3-phase electrical service will need to be upsized to 600 Amps to accommodate the additional loads. A new utility transformer, meter, and associated feeders will be required. A new 600 Amp main disconnect switch will be provided with 500 Amp fuses.
    - The existing 150 kW generator and automatic transfer switch will be replaced with a new 450 kW generator, 600 Amp transfer switch, associated conduit and wiring.

        - The existing 500 kW generator and 800 Amp transfer switch from Well No. 6 could be relocated to Well No. 5. This would eliminate the need for the City to purchase and install a new 450 kW generator and transfer switch at this location.

    - The existing 200 Amp distribution panel will be replaced with a new 600 Amp main distribution panel. The existing brine pump, HVAC equipment, rectifier, well pump, lighting, and receptacles will be reconnected to the new MDP. The new RO Feed Pump, Finished Water Pumps, and Aerator will be fed from the new MDP.

- Well No. 6 (Legends)

    - The existing 800 Amp, 480 Volt, 3-phase electrical service will need to be upsized to 1000 Amps to accommodate the additional loads. A new utility transformer, meter, and associated feeders will be required. A new 1000 Amp service entrance rated disconnect switch will be provided and the existing 800 Amp enclosed circuit breaker will be removed.

    - The existing 500 kW generator and automatic transfer switch will be replaced with a new 600 kW generator, 1000 Amp transfer switch, associated conduit and wiring.

    - The existing 700 Amp distribution panel will remain but will be reconnected to a new 1000 Amp main distribution panel. The new MDP will also feed a new 400 Amp distribution panel (DP) in the potential new treatment plant building.

    - The new 400 Amp DP will serve the treatment building lighting, power, heating and ventilation. The new RO Feed Pump, Aerator and Blowers will be fed from the new distribution panel.

- Well No. 8 (Viola)

    - The existing 800 Amp, 480 Volt, 3-phase electrical service will need to be upsized to 1000 Amps to accommodate the additional loads. A new utility transformer, meter, and associated feeders will be required. A new 1000 Amp service entrance rated disconnect switch will be provided and the existing 800 Amp main disconnect will be removed.

- The existing 500 kW generator and 800 Amp automatic transfer switch will be replaced with a new 750 kW generator, 1000 Amp transfer switch, associated conduit and wiring.

- The existing 800 Amp MDP will be replaced with a new 1000 Amp main distribution panel. The (2) existing booster stations, existing brine pump, existing well, HVAC equipment, lighting and power will be reconnected to the new MDP. The new RO Feed Pump, Aerator and Blowers will be connected to the new MDP.

- Well No. 9 (Arbors)

  - The existing 1000 Amp, 480 Volt, 3-phase electrical service and associated distribution equipment will remain. The new Aerator and Blowers will be connected to the existing 400 Amp DP-2.

  - Additional modifications will be required if RO Feed Equipment is installed at this site.

    - The electrical service would be upsized to 1200 Amps.

    - The existing 450 kW generator would be replaced with a new 600 kW generator.

    - The existing 1000 Amp automatic transfer switch would be replaced with a new 1200 Amp transfer switch.

    - An existing 1000 Amp MDP would be replaced with a new 1200 Amp MDP.

- Well No. 10 (Ashton)

  - The existing 400 Amp, 480 Volt, 3-phase electrical service will need to be upsized to 600 Amps to accommodate the additional loads. A new utility transformer, meter, and associated feeders will be required. A new 600 Amp main disconnect switch will be provided with 500 Amp fuses.

  - The existing 230 kW generator and automatic transfer switch will be replaced with a new 275 kW generator, 600 Amp transfer switch, associated conduit and wiring.

- The existing 400 Amp MDP will be replaced with a new 600 Amp MDP. The existing brine pump, HVAC equipment, rectifier, well pump, lighting, and receptacles will be reconnected to the new MDP. The new RO Feed Pump, Finished Water Pumps, and Aerator will be fed from the new MDP.

Table 9-2 presents a summary of the major electrical modifications required at each location.

**Table 9-2. Electrical Modifications Summary**

| Well | Service Size | | Main Dist. Panel | | Generator | | Potential Generator Moves |
|---|---|---|---|---|---|---|---|
| | Existing (Amp) | Needed (Amp) | Existing (Amp) | Needed (Amp) | Existing (kW) | Needed (kW) | |
| 1 | 200 | 600 | 175 | 600 | 150 | 300 | Move 150 from Well 5, or 500 kW from Well 8 |
| 5 | 200 | 600 | 200 | 600 | 150 | 450 | Move 500 kW from Well 6 |
| 6 | 800 | 1000 | 700 | 1000 | 500 | 600 | |
| 8 | 800 | 1000 | 800 | 1000 | 500 | 750 | |
| 9 | 1000 | No Chng | 1000 | No Chng | 450 | No Chng | |
| 10 | 400 | 600 | 400 | 600 | 230 | 275 | |

# Section 10. Summary of Improvements by Site

Table 10-1 presents a summary of the various improvements needed for each site. Keep in mind that this list is for the key improvements and modifications needed. If the City moves ahead with implementing RO treatment, other items will surface during final design.

Appendix F contains a site drawing for each plant site. The City's property boundary is shown, along with the location of major existing facilities at each site and potential locations for new facilities required. Final position for any new facilities will be determined during final design after field surveying is completed and more detailed design development with manufactures, as well as the City.

A few of the major issues to point out:

- It appears that additional land with a 20 to 25 foot width (minimum) at Well 10 will be required to provide the space needed for the installation of the finished water booster pump station. This land could be on the north, west, or south sides of the existing City property.
- New treatment building at Well 6.
- New finished water wetwell, and booster stations are required at Wells 1, 5, and 10.
- Aeration for $CO_2$ stripping is included at all plant sites, thus reducing the annual cost for caustic soda feed.
- Installing VFDs on all well pumps to provide a consistent feed pressure into the RO skid.
- Treatment at Well 9 will not be changed at this time since the finished water meets the goals set forth, except for the addition of aeration and caustic soda feed for finished water stability.
- There does not appear to be space available in the existing Well 9 building to install the caustic soda feed system. Thus, a new relatively small (8 ft x 8 ft) building is included. The existing Well 9 treatment building floor plan is included in Appendix C.

## Table 10-1: Improvements Summary Matrix

| Improvement Description | Well 1 Howerton | Well 5 Drewel | Well 6 Legends | Well 8 Viola | Well 9 Arbors | Well 10 Ashton |
|---|---|---|---|---|---|---|
| | | | | | | |
| Additional land required for new booster station | ✓ | | | | | |
| Remove IX equipment and process pipe/valves | ✓ | ✓ | ✓ | ✓ | | ✓ |
| Install new RO treatment equipment | ✓ | ✓ | ✓ | ✓ | | ✓ |
| Install new process pipe/valves inside buildings | ✓ | ✓ | ✓ | ✓ | | ✓ |
| Install VFDs on well pumps | ✓ | ✓ | ✓ | ✓ | | ✓ |
| Install new well pumps to meet new head conditions | | | ✓ | ✓ | | |
| New wetwell and booster station | ✓ | ✓ | | | | ✓ |
| Site improvements to new buildings, booster stations | ✓ | ✓ | ✓ | | | ✓ |
| Site pipe & valves to/from booster station, new bldg | ✓ | ✓ | ✓ | | | ✓ |
| In-Tank aeration system | | | ✓ | ✓ | ✓ | |
| Induced draft aeration system | ✓ | ✓ | | | | ✓ |
| Electrical Upgrade of Electrical Service | ✓ | ✓ | ✓ | ✓ | | ✓ |
| Electrical Upgrade of Main Distirbtuion Panel | ✓ | ✓ | ✓ | ✓ | | ✓ |
| Electrical Changes to Standby Generators | ✓ | ✓ | ✓ | ✓ | | ✓ |
| New treatment building | | | ✓ | | | |
| Relocate Existing $Cl_2$ and Fluoride Feed Systems | | | ✓ | | | |
| Caustic Soda feed system | ✓ | ✓ | ✓ | ✓ | ✓ | ✓ |
| Antiscalant feed system | ✓ | ✓ | ✓ | ✓ | | ✓ |
| Remove wall block-out, new overhead door | ✓ | ✓ | | ✓ | | |
| New Building to House Caustic Feed System | | | | | ✓ | |
| | | | | | | |

# Section 11. COST ESTIMATES

## 11.1. Construction Cost Estimates

Concept level cost estimates have been prepared for each plant site and are summarized in Table 11-1. More detailed estimates for each well site can be found in Appendix G. If all the noted improvements are implemented, the overall project cost estimate is $10,498,000.

The City has various options available for funding these improvements. For the purposes of this report it is assumed that State Revolving Loan Funds (SRF) are utilized. Anticipated term is 20 years with an assumed interest rate of 3.0%. The overall capital cost noted above with those terms results in an annual principal and interest payment of approximately $705,600 or $1.12/1000 gallons based on a current annual overall water production of 628,000,000 gallons.

There could be some salvage value to the Ion Exchange systems pressure vessels, and generators that are no longer of use. However, no consideration has been made for that potential possibility.

## 11.2. Operating Cost Estimates

Impacts to the operations and maintenance budget related to the City's water treatment plants was estimated and is summarized in Table 11-2. Detailed information can be found in Appendix H.

The impact costs have been presented with and without additional labor of one additional staff person to cover operation of the five RO treatment plants being considered. A fund would need to be set up to collect money to pay for membrane module replacement at an estimated seven (7) year life. The estimated additional cost to the City's operating budget with additional labor is $277,000 ($0.44/1000 gallons), and $144,000 ($0.23/1000 gallons) without additional labor.

## 11.3. Impact to Water Rates

It is beyond the scope of this study to do a detailed water rate impact analysis. However, to provide some indication of the potential impact to water rates, an analysis was completed on a cost per 1000-gallon basis. Based on a current overall yearly water production total of approximately 628,000,000 gallons the capital cost equates to $1.12/1000 gallons. The impact to the O&M cost is estimated to be $0.44/1000 gallons with additional labor, and $0.23/1000 gallons without. Table 11-3 presents a recap of current water rates, and the potential rates with the additional cost factored in.

## Table 11-1. Summary of Opinion of Probable Cost

| ITEM NO. | ITEM DESCRIPTION | WELL NO. 1 | WELL NO. 5 | WELL NO. 6 | WELL NO. 8 | WELL NO. 9 | WELL NO. 10 | TOTAL |
|---|---|---|---|---|---|---|---|---|
| | | | | | | | | |
| 1 | BONDS, MOBILIZATION, SUBMITTALS, START-UP, O&M MANUALS, EROSION CONTROL | $ 30,000 | $ 30,000 | $ 38,000 | $ 27,500 | $ 14,000 | $ 30,000 | $ 169,500 |
| 2 | DEMOLITION, & REMOVALS | $ 27,000 | $ 27,000 | $ - | $ 27,000 | $ - | $ 27,000 | $ 108,000 |
| 3 | CONCRETE | $ 72,000 | $ 80,000 | $ 45,000 | $ - | $ 5,000 | $ 72,000 | $ 274,000 |
| 4 | MISC STEEL FRAMING & SUPPORTS | $ 5,000 | $ 5,000 | $ 5,000 | $ 5,000 | $ - | $ 5,000 | $ 25,000 |
| 5 | NEW BUILDING WALLS | --- | --- | $ 81,000 | --- | $ 9,000 | --- | $ 90,000 |
| 6 | NEW BUILDING ROOF, INSULATION, GUTTERS, CAULK | --- | --- | $ 42,000 | --- | $ 3,000 | --- | $ 45,000 |
| 7 | DOORS AND WINDOWS | $ 3,500 | $ 3,500 | $ 5,000 | $ 3,500 | $ 1,000 | $ 3,500 | $ 20,000 |
| 8 | PAINTING & COATING | $ 8,000 | $ 8,000 | $ 20,000 | $ 8,000 | $ - | $ 8,000 | $ 52,000 |
| 9 | PLUMBING | --- | --- | $ 11,000 | --- | $ - | --- | $ 11,000 |
| 10 | HEAT & VENTILATION | --- | --- | $ 27,000 | --- | $ 8,000 | --- | $ 35,000 |
| 11 | ELECTRICAL PANELS, CONDUIT, WIRE | $ 208,000 | $ 180,000 | $ 202,000 | $ 207,000 | $ 8,000 | $ 171,000 | $ 976,000 |
| 12 | NEW GENERATOR | $ - | $ - | $ 172,000 | $ 209,000 | $ - | $ 78,000 | $ 459,000 |
| 13 | RELOCATED GENERATOR | $ 15,000 | $ 15,000 | $ - | $ - | $ - | $ - | $ 30,000 |
| 14 | EXCAVATION, FENCING, SEEDING, ASPHALT/GRAVEL | $ 10,000 | $ 9,500 | $ 5,000 | $ - | $ 2,000 | $ 10,000 | $ 36,500 |
| 15 | SITE PIPING, TRENCHING, BACKFILL, VALVES | $ 10,000 | $ 10,000 | $ 25,000 | $ - | $ 2,500 | $ 20,000 | $ 67,500 |
| 16 | INTERIOR PROCESS PIPING, VALVES, METERS & APPURTENANCES | $ 50,000 | $ 50,000 | $ 50,000 | $ 50,000 | $ - | $ 50,000 | $ 250,000 |
| 17 | RO SYSTEM, INSTALLATION, 1/5 OF CIP TRAILER | $ 471,000 | $ 471,000 | $ 336,000 | $ 391,000 | $ - | $ 446,000 | $ 2,115,000 |
| 18 | WELL PUMP CHANGE OUT | $ - | $ - | $ 30,000 | $ 30,000 | $ - | $ - | $ 60,000 |
| 19 | PRE-MANUFACTURED FINISHED WATER BOOSTER STATION | $ 296,000 | $ 364,000 | $ - | $ - | $ - | $ 296,000 | $ 956,000 |
| 20 | AERATION SYSTEM | $ 50,000 | $ 50,000 | $ 93,000 | $ 93,000 | $ 93,000 | $ 50,000 | $ 429,000 |
| 21 | CAUSTIC SODA FEED SYSTEM, BULK TANK, SCALE, DAY TANK | $ 10,000 | $ 10,000 | $ 10,000 | $ 10,000 | $ 10,000 | $ 10,000 | $ 60,000 |
| 22 | INSTRUMENTATION , FIELD DEVICES, CONDUITS & WIRE | $ 20,000 | $ 20,000 | $ 20,000 | $ 20,000 | $ 5,000 | $ 20,000 | $ 105,000 |
| | | | | | | | | $ - |
| | SUBTOTAL TOTAL ESTIMATED COST OF CONSTRUCTION | $ 1,285,500 | $ 1,333,000 | $ 1,217,000 | $ 1,081,000 | $ 160,500 | $ 1,296,500 | $ 6,373,500 |
| | UNACCOUNTED FOR COSTS (15%) | $ 193,000 | $ 200,000 | $ 183,000 | $ 162,000 | $ 24,000 | $ 194,000 | $ 956,000 |
| | **TOTAL ESTIMATED COST OF CONSTRUCTION** | **$ 1,478,500** | **$ 1,533,000** | **$ 1,400,000** | **$ 1,243,000** | **$ 184,500** | **$ 1,490,500** | **$ 7,329,500** |
| | | | | | | | | |
| | LAND | $ 15,000 | --- | --- | --- | --- | --- | $ 15,000 |
| PILOT STUDY, DESIGN ENG, CONST ENG, CONSTRUCT OBSERVE, LEGAL, FUNDING, MISC (30%) | | $ 444,000 | $ 460,000 | $ 420,000 | $ 373,000 | $ 55,000 | $ 447,000 | $ 2,199,000 |
| | **SUBTOTAL** | **$ 1,937,500** | **$ 1,993,000** | **$ 1,820,000** | **$ 1,616,000** | **$ 239,500** | **$ 1,937,500** | **$ 9,543,500** |
| | OVERALL CONTINGENCY (10%) | $ 194,000 | $ 199,000 | $ 182,000 | $ 162,000 | $ 24,000 | $ 194,000 | $ 954,000 |
| | **PROJECT TOTAL** | **$ 2,131,500** | **$ 2,192,000** | **$ 2,002,000** | **$ 1,778,000** | **$ 263,500** | **$ 2,131,500** | **$ 10,497,500** |



Bartlett & West
Driving Community and Industry Forward, Together.

**Table 11-2. Summary of Estimated Impact to Operations Budget**

| Impacted Budget Item | Well #1 (Howerton) | Well #5 (Drewel) | Well #6 (Legends) | Well #8 (Viola) | Well #9 Arbors | Well #10 (Ashton) | Total |
|---|---|---|---|---|---|---|---|
| | | | | | | | |
| Ave Day Production (GPD) | 394,877 | 390,748 | 362,422 | 301,241 | 53,000 | 219,458 | 1,721,745 |
| Ave Annual Water Production(GAL) | 144,130,000 | 142,623,000 | 132,284,000 | 109,953,000 | 19,345,000 | 80,102,000 | 628,437,000 |
| | | | | | | | |
| Labor | $ 26,600 | $ 26,600 | $ 26,600 | $ 26,600 | $ - | $ 26,600 | $ 133,000 |
| Aeration (In-Tank) | $ - | $ - | $ 8,843 | $ 8,843 | $ 8,843 | $ - | $ 26,529 |
| Aeration (Induced Draft) | $ 83 | $ 82 | $ - | $ - | $ - | $ 84 | $ 249 |
| Heating/Cooling: New Building | $ - | $ - | $ 3,360 | $ - | $ 240 | $ - | $ 3,600 |
| Additional Pumping Cost | $ 11,983 | $ 13,559 | $ 11,616 | $ 9,789 | $ - | $ 7,132 | $ 54,079 |
| Membrane Module Replacement Fund | $ 15,429 | $ 15,429 | $ 9,643 | $ 11,571 | $ - | $ 13,500 | $ 65,571 |
| Chemical Cleaning RO Filters | $ 1,000 | $ 1,000 | $ 1,000 | $ 1,000 | $ - | $ 1,000 | $ 5,000 |
| Cartridge Filter Replacement | $ 4,200 | $ 4,200 | $ 3,360 | $ 3,360 | $ - | $ 3,360 | $ 18,480 |
| Antiscalent Chemical | $ 14,989 | $ 16,961 | $ 14,531 | $ 12,245 | $ - | $ 8,921 | $ 67,647 |
| Caustic Soda Chemical | $ 10,668 | $ 18,096 | $ 19,582 | $ 13,951 | $ 2,045 | $ 5,929 | $ 70,271 |
| Reduction in IX Salt | $ (39,636) | $ (39,221) | $ (36,378) | $ (30,237) | $ - | $ (22,028) | $ (167,500) |
| | | | | | | | |
| **TOTAL ANNUAL COST** | $ 45,316 | $ 56,706 | $ 62,157 | $ 57,123 | $ 11,129 | $ 44,497 | $ 276,928 |
| **COST/ 1,000 GAL** | $ 0.31 | $ 0.40 | $ 0.47 | $ 0.52 | $ 0.58 | $ 0.56 | $ 0.44 |
| **TOTAL ANNUAL COST W/O LABOR** | $ 18,716 | $ 30,106 | $ 35,557 | $ 30,523 | $ 11,129 | $ 17,897 | $ 143,928 |
| **COST/ 1,000 GAL** | $ 0.13 | $ 0.21 | $ 0.27 | $ 0.28 | $ 0.58 | $ 0.22 | $ 0.23 |



Bartlett & West
Driving Community and Industry Forward, Together.

**Table 11-3. Potential Impact to Water Rates**

| | |
|---|---|
| Capital Cost Impact: | $1.12 $/1,000 gal |
| Operational Cost Impact w/ Labor Add: | $0.44 $/1,000 gal |
| Operational Cost Impact w/o Labor Add: | $0.23 $/1,000 gal |

| GALLONS USED | CURRENT | | POTENTIAL IMPACT W/LABOR | | POTENTIAL IMPACT W/O LABOR | |
|---|---|---|---|---|---|---|
| | RESIDENTIAL | COMMERCIAL | RESIDENTIAL | COMMERCIAL | RESIDENTIAL | COMMERCIAL |
| (PER MO. IN 1,000's) | MONTHLY | MONTHLY | MONTHLY | MONTHLY | MONTHLY | MONTHLY |
| 1 | $ 11.55 | $ 8.90 | $ 13.11 | $ 10.46 | $ 12.90 | $ 10.25 |
| 2 | $ 11.55 | $ 8.90 | $ 14.67 | $ 12.02 | $ 14.25 | $ 11.60 |
| 3 | $ 12.68 | $ 10.41 | $ 17.36 | $ 15.09 | $ 16.73 | $ 14.46 |
| 4 | $ 13.81 | $ 11.92 | $ 20.05 | $ 18.16 | $ 19.21 | $ 17.32 |
| 5 | $ 14.94 | $ 13.43 | $ 22.74 | $ 21.23 | $ 21.69 | $ 20.18 |
| 7 | $ 16.82 | $ 16.09 | $ 27.74 | $ 27.01 | $ 26.27 | $ 25.54 |
| 10 | $ 19.64 | $ 20.08 | $ 35.24 | $ 35.68 | $ 33.14 | $ 33.58 |
| 20 | $ 41.44 | $ 33.38 | $ 72.64 | $ 64.58 | $ 68.44 | $ 60.38 |
| 30 | $ 63.24 | $ 46.68 | $ 110.04 | $ 93.48 | $ 103.74 | $ 87.18 |
| 40 | $ 85.04 | $ 59.98 | $ 147.44 | $ 122.38 | $ 139.04 | $ 113.98 |
| 50 | $ 106.84 | $ 73.28 | $ 184.84 | $ 151.28 | $ 174.34 | $ 140.78 |

# APPENDIX A

# Water Quality Data

**CITY OF EUREKA, MO**

**WATER QUALITY ANALYSIS SUMMARY**

**GENERAL PARAMETERS, METALS, RADIONUCLIDES, ORGANICS, AND DBPs**

| CONSTITUENTS | | RESULTS | | | | | | | | | | | | |
|---|---|---|---|---|---|---|---|---|---|---|---|---|---|---|
| | | Well #1 | Well #1 | Well #5 | Well #5 | Well #6 | Well #6 | Well #8 | Well #8 | Well #9 | Well #9 | Well #10 | Well #10 | MCL |
| | | Raw | Raw | Raw | Raw | Raw | Raw | Raw | Raw | Raw | Raw | Raw | Raw | |
| | | 10/24/2017 | 8/28/2018 | 10/24/2017 | 8/28/2018 | 10/24/2017 | 8/29/2018 | 10/24/2017 | 8/28/2018 | 10/24/2017 | 8/28/2018 | 10/24/2017 | 8/29/2018 | |
| **Field Parameters** | | | | | | | | | | | | | | |
| Temperature | °F | Ave Aug-Sept 2018 = 60 | | Ave Aug-Sept 2018 = 59 | | Ave Aug-Sept 2018 = 62 | | Ave Aug-Sept 2018 = 61 | | Ave Aug-Sept 2018 = 60 | | Ave Aug-Sept 2018 = 60 | | |
| pH | | Ave Aug-Sept 2018 = 7.30 | | Ave Aug-Sept 2018 = 7.26 | | Ave Aug-Sept 2018 = 7.41 | | Ave Aug-Sept 2018 = 7.32 | | Ave Aug-Sept 2018 = 7.32 | | Ave Aug-Sept 2018 = 7.39 | | |
| | | | | | | | | | | | | | | |
| **Other Parameters** | | | | | | | | | | | | | | |
| Conductivity | mS/cm | n.t. | n.t. | n.t. | n.t. | n.t. | n.t. | n.t. | n.t. | n.t. | n.t. | n.t. | n.t. | |
| Solids, Total Dissolved | mg/L | 1430 | 759 | 1140 | 1300 | 1040 | 1040 | 828 | 834 | 364 | 352 | 846 | 947 | 500 [3] |
| Total Organic Carbon | mg/L | <0.5 | n.t. | <0.5 | n.t. | <0.5 | n.t. | <0.5 | n.t. | <0.5 | n.t. | <0.5 | n.t. | |
| Turbidity | NTU | <0.2 | n.t. | <0.2 | n.t. | 0.3 | n.t. | <0.2 | n.t. | <0.2 | n.t. | <0.2 | n.t. | |
| | | | | | | | | | | | | | | |
| **General Chemistry** | | | | | | | | | | | | | | |
| Alkalinity, as $CaCO_3$ | mg/L | 276 | 284 | 292 | 295 | 270 | 274 | 274 | 272 | 294 | 304 | 286 | 290 | |
| Calcium, total | mg/L | 77.5 | 81.6 | 95.2 | 117 | 87.8 | 81.1 | 84.8 | 87.0 | 74.3 | 47.8 | 90.8 | 91.7 | |
| Chloride | mg/L | 212 | 263 | 488 | 544 | 439 | 476 | 307 | 325 | 24.5 | 28.1 | 332 | 334 | 250 [3] |
| Fluoride | mg/L | 0.40 | n.t. | 0.60 | n.t. | 0.40 | n.t. | 0.50 | n.t. | 0.20 | n.t. | 0.30 | n.t. | 4.0 |
| Hardness, Total as $CaCO_3$ | mg/l | 325 | 349 | 399 | 467 | 374 | 350 | 365 | 377 | 300 | 193 | 377 | 383 | |
| Iron, total | mg/L | <0.05 | n.t. | <0.05 | | <0.05 | n.t. | <0.05 | n.t. | <0.05 | n.t. | <0.05 | n.t. | 0.3 [3] |
| Magnesium, total | mg/L | 32.0 | 35.1 | 39.3 | 42.5 | 37.6 | 35.9 | 37.3 | 38.9 | 27.3 | 18 | 36.4 | 37.4 | |
| Manganese, total | mg/L | <0.05 | n.t. | <0.05 | n.t. | <0.05 | n.t. | <0.05 | n.t. | <0.05 | n.t. | <0.05 | n.t. | 0.05 [3] |
| Nitrogen, Ammonia | mg/L | <0.14 | n.t. | <0.14 | n.t. | <0.14 | n.t. | <0.14 | n.t. | <0.14 | n.t. | <0.14 | n.t. | |
| Nitrogen, Nitrate | mg/L | 0.7 | n.t. | 0.6 | n.t. | <0.1 | n.t. | <0.1 | n.t. | 0.6 | n.t. | 0.6 | n.t. | 10 |
| Sulfide, total | mg/L | <0.05 | n.t. | <0.5 | n.t. | <0.05 | n.t. | <0.05 | n.t. | <0.5 | n.t. | <0.05 | n.t. | |
| Sulfate | mg/L | 35.6 | 38.7 | 63.3 | 61.8 | 43 | 42.1 | 46.7 | 46.3 | 24.2 | 23.9 | 44.2 | | 250 [3] |
| | | | | | | | | | | | | | | |
| **Inorganics, Metals** | | | | | | | | | | | | | | |
| Sodium, total | mg/L | n.t. | 117 | n.t. | 272 | n.t. | 237 | n.t. | 163 | n.t. | 17.2 | n.t. | 186 | |
| | | | | | | | | | | | | | | |

Highlighted result appears abnomal based on other available information

n.t. = not tested n.d. = not detected

Notes:

1. Minimum Detection Limit (MDL) is the lowest detectable concentration of a constituent.
2. Maximum Contaminant Level (MCL) is the highest level of contaminant allowed in drinking water in accordance with USEPA National Primary Drinking Water Standards.
3. Secondary Maximum Contaminant Levels (SMCLs) are non-enforceable USEPA guidelines regulating contaminants that may cause cosmetic effects or aesthetic effects in drinking water.

**CITY OF EUREKA, MO**
**WATER QUALITY ANALYSIS SUMMARY**
**Well No. 1**

| | | Raw | | | Finished | | | MCL |
|---|---|---|---|---|---|---|---|---|
| **Date:** | | 10/24/2017 | 8/28/2018 | | 5/22/2017 | 10/24/2017 | 8/28/2018 | |
| **Field Parameters** | | | | | | | | |
| Temperature | ºC/ºF | - | - | | - | | | |
| pH[4] | | - | - | | 6.80 | - | | |
| | | | | | | - | | |
| **Other Parameters** | | | | | | | | |
| Solids, Total Dissolved | mg/L | 1430.00 | 759.00 | | 650.00 | 674.00 | 731.00 | 500 [3] |
| Total Organic Carbon | mg/L | <0.5 | | | - | <0.5 | | |
| Turbidity | NTU | <0.2 | | | - | <0.2 | | |
| **General Chemistry** | | | | | | | | |
| Alkalinity, as $CaCO_3$ | mg/L | 276.00 | 284.00 | | 287.00 | 278.00 | 278.00 | |
| Calcium, total | mg/L | 77.50 | 81.60 | | 33.40 | 23.00 | 35.20 | |
| Chloride | mg/L | 212.00 | 263.00 | | 170.00 | 211.00 | 263.00 | 250 [3] |
| Fluoride | mg/L | 0.40 | | | 0.60 | 0.60 | | 4 |
| Hardness, Total as $CaCO_3$ | mg/l | 325.00 | 349.00 | | 151.00 | 99.40 | 153.00 | |
| Iron, total | mg/L | <0.05 | | | - | <0.05 | | 0.3 [3] |
| Magnesium, total | mg/L | 32.00 | 35.10 | | 16.40 | 10.20 | 15.90 | |
| Manganese, total | mg/L | <0.05 | | | - | <0.05 | | 0.05 [3] |
| Nitrogen, Ammonia | mg/L | <0.14 | | | - | <0.14 | | |
| Nitrogen, Nitrite | mg/L | 0.70 | | | 0.59 | 0.70 | | 10 |
| Sulfide, total | mg/L | <0.05 | | | - | <0.05 | | |
| Sulfate | mg/L | 35.60 | 38.70 | | 32.00 | 35.40 | 38.40 | 250 [3] |
| **Inorganics, Metals** | | | | | | | | |
| Barium, total | mg/L | - | | | 0.07 | - | | 2 |
| Copper, total | mg/L | - | | | 0.05 | - | | 1.3 (90%) |
| Lead, total | µg/L | - | | | <0.5 | - | | 0.015 (90%) |
| Potassium, total | mg/L | - | | | 6.92 | - | | |
| Sodium, total[4] | mg/L | - | 117.00 | | 179.00 | - | 252.00 | |
| Zinc, total | mg/L | - | | | <0.05 | - | | 5 [3] |
| **Radionuclides** | | | | | | | | |
| Gross Alpha[4] | pCi/L | - | | | 0.66 | - | | 15 |
| Radium-226 | pCi/L | - | | | 0.45 | - | | 5 (226+228) |
| Radium-228 | pCi/L | - | | | 0.31 | - | | 5 (226+228) |
| Combined Radium (226 &228)[4] | pCi/L | - | | | 0.76 | - | | |
| **Disinfection By-Products** | | | | | | | | |
| Total THMs | µg/L | - | | | 2.40 | - | | 80 |
| Halo Acetic Acid [5] | µg/L | - | | | <1.0 | - | | 60 |
| **Organics, Volatile Organic Chemicals (VOC)** | | | | | | | | |
| Tetrachloroethylene | µg/L | - | | | 0.60 | - | | 5 |
| Trichlorofluoromethane | µg/L | - | | | 4.50 | - | | N.A. |

Highlighted Result Appears Abnormal

**CITY OF EUREKA, MO**
**WATER QUALITY ANALYSIS SUMMARY**
**Well No. 5**

| | | Raw | | | Finished | | | | MCL |
|---|---|---|---|---|---|---|---|---|---|
| **Date:** | | 10/24/2017 | 8/28/2018 | | 5/22/2017 | 10/24/2017 | 8/17/2018 (Hawkins) | 8/28/2018 | |
| **Field Parameters** | | | | | | | | | |
| Temperature | °C/°F | - | | | - | - | 55 °F | | |
| pH[4] | | - | | | 6.79 | - | 7.37 | | |
| **Other Parameters** | | | | | | | | | |
| Solids, Total Dissolved | mg/L | 1140.00 | 1300.00 | | 918.00 | 1040.00 | 1405.00 | 1210.00 | 500 [3] |
| Total Organic Carbon | mg/L | <0.5 | | | - | <0.5 | - | | |
| Turbidity | NTU | <0.2 | | | - | <0.2 | - | | |
| **General Chemistry** | | | | | | | | | |
| Alkalinity, as $CaCO_3$ | mg/L | 292.00 | 295.00 | | 305.00 | 292.00 | 276.00 | 296.00 | |
| Calcium, total | mg/L | 95.20 | 117.00 | | 5.61 | 27.90 | 44.76 | 28.70 | |
| Chloride | mg/L | 488.00 | 544.00 | | 338.00 | 487.00 | 500.00 | 557.00 | 250 [3] |
| Fluoride | mg/L | 0.60 | | | 0.67 | 0.80 | - | | 4 |
| Hardness, Total as $CaCO_3$ | mg/l | 399.00 | 467.00 | | 23.40 | 121.00 | 217.2 | 144.0 | |
| Iron, total | mg/L | <0.05 | | | - | <0.05 | <0.001 | | 0.3 [3] |
| Magnesium, total | mg/L | 39.30 | 42.50 | | 2.30 | 12.40 | 25.70 | 17.50 | |
| Manganese, total | mg/L | <0.05 | | | - | <0.05 | <0.001 | | 0.05 [3] |
| Nitrogen, Ammonia | mg/L | <0.14 | | | - | <0.14 | 0.02 | | |
| Nitrogen, Nitrite | mg/L | 0.60 | | | 0.63 | 0.60 | - | | 10 |
| Nitrogen, Nitrate | mg/L | - | | | | | 3.94 | | |
| Sulfide, total | mg/L | <0.5 | | | - | <0.5 | - | | |
| Sulfate | mg/L | 63.30 | 61.80 | | 64.10 | 62.40 | 66.00 | 60.10 | 250 [3] |
| **Inorganics, Metals** | | | | | | | | | |
| Barium, total | mg/L | - | | | <0.05 | - | - | | 2 |
| Copper, total | mg/L | - | | | 0.10 | - | 0.06 | | 1.3 (90%) |
| Lead, total | µg/L | - | | | <0.5 | - | <0.001 | | 0.015 (90%) |
| Potassium, total | mg/L | - | | | 3.43 | - | 7.11 | | |
| Sodium, total[4] | mg/L | - | 272.00 | | 339.00 | - | 379.90 | 444.00 | |
| Zinc, total | mg/L | - | | | <0.05 | - | 0.03 | | 5 [3] |
| **Radionuclides** | | | | | | | | | |
| Gross Alpha[4] | pCi/L | - | - | | -0.30 | - | | | 15 |
| Radium-226 | pCi/L | - | - | | 0.25 | - | | | 5 (226+228) |
| Radium-228 | pCi/L | - | - | | 0.35 | - | | | 5 (226+228) |
| Combined Radium (226 &228)[4] | pCi/L | - | - | | 0.60 | - | | | |
| **Disinfection By-Products** | | | | | | | | | |
| Total THMs | µg/L | - | - | | 2.70 | - | | | 80 |
| Halo Acetic Acid 5 | µg/L | - | - | | <1.0 | - | | | 60 |
| **Organics, Volatile Organic Chemicals (VOC)** | | | | | | | | | |
| Tetrachloroethylene | µg/L | - | - | | 1.60 | - | | | 5 |
| Trichlorofluoromethane | µg/L | - | - | | <0.05 | - | | | N.A. |

Highlighted Result Appears Abnormal

Red Total Hardness = Calculated from Ca + Mg

**CITY OF EUREKA, MO**
**WATER QUALITY ANALYSIS SUMMARY**
**Well No. 6**

| | | Raw | | | | Finished | | | | MCL |
|---|---|---|---|---|---|---|---|---|---|---|
| **Date:** | | 10/24/2017 | 8/29/2018 | | | 5/22/2017 | 10/24/2017 | 8/17/2018 (Hawkins) | 8/29/2018 | |
| **Field Parameters** | | | | | | | | | | |
| Temperature | ºC/ºF | - | | | | - | - | 55 ºF | | |
| pH[4] | | - | | | | 6.99 | - | 7.50 | | |
| **Other Parameters** | | | | | | | | | | |
| Solids, Total Dissolved | mg/L | 1040.00 | 1040.00 | | | 1070.00 | 990.00 | 1145.00 | 1010.00 | 500 [3] |
| Total Organic Carbon | mg/L | <0.5 | | | | - | <0.5 | - | | |
| Turbidity | NTU | <0.2 | | | | - | <0.2 | - | | |
| **General Chemistry** | | | | | | | | | | |
| Alkalinity, as $CaCO_3$ | mg/L | 270.00 | 274.00 | | | 268.00 | 268.00 | 261.00 | 271.00 | |
| Calcium, total | mg/L | 87.80 | 81.10 | | | 22.10 | 27.10 | 33.70 | 17.40 | |
| Chloride | mg/L | 439.00 | 476.00 | | | 444.00 | 440.00 | 384.00 | 432.00 | 250 [3] |
| Fluoride | mg/L | 0.40 | | | | 0.61 | 0.70 | - | | 4 |
| Hardness, Total as $CaCO_3$ | mg/l | 374.00 | 350.00 | | | 99.60 | 119.00 | 145.4 | 76.8 | |
| Iron, total | mg/L | <0.05 | | | | - | <0.05 | <0.001 | | 0.3 [3] |
| Magnesium, total | mg/L | 37.60 | 35.90 | | | 10.80 | 12.50 | 14.90 | 8.10 | |
| Manganese, total | mg/L | <0.05 | | | | - | <0.05 | <0.001 | | 0.05 [3] |
| Nitrogen, Ammonia | mg/L | <0.14 | | | | - | <0.14 | <0.001 | | |
| Nitrogen, Nitrite | mg/L | <0.1 | | | | <0.1 | <0.1 | - | | 10 |
| Nitrogen, Nitrate | mg/L | - | | | | | | <0.001 | | |
| Sulfide, total | mg/L | <0.05 | | | | - | <0.05 | - | | |
| Sulfate | mg/L | 43.00 | 42.10 | | | 44.60 | 42.60 | 40.70 | 42.10 | 250 [3] |
| **Inorganics, Metals** | | | | | | | | | | |
| Barium, total | mg/L | - | | | | <0.05 | - | - | | 2 |
| Copper, total | mg/L | - | | | | 0.07 | - | <0.001 | | 1.3 (90%) |
| Lead, total | µg/L | - | | | | <0.5 | - | <0.001 | | 0.015 (90%) |
| Potassium, total | mg/L | - | | | | 10.10 | - | 5.01 | | |
| Sodium, total[4] | mg/L | - | 237.00 | | | 340.00 | - | 318.58 | 400.00 | |
| Zinc, total | mg/L | - | | | | <0.05 | - | 0.02 | | 5 [3] |
| **Radionuclides** | | | | | | | | | | |
| Gross Alpha[4] | pCi/L | - | | | | 6.76 | - | - | | 15 |
| Radium-226 | pCi/L | - | | | | 0.69 | - | - | | 5 (226+228) |
| Radium-228 | pCi/L | - | | | | 1.10 | - | - | | 5 (226+228) |
| Combined Radium (226 &228)[4] | pCi/L | - | | | | 1.79 | - | - | | |
| **Disinfection By-Products** | | | | | | | | | | |
| Total THMs | µg/L | - | | | | 0.70 | - | - | | 80 |
| Halo Acetic Acid [5] | µg/L | - | | | | 1.70 | - | - | | 60 |
| **Organics, Volatile Organic Chemicals (VOC)** | | | | | | | | | | |
| Tetrachloroethylene | µg/L | - | | | | <0.5 | - | - | | 5 |
| Trichlorofluoromethane | µg/L | - | | | | <0.5 | - | - | | N.A. |

Highlighted Result Appears Abnormal

Red Total Hardness = Calculated from Ca + Mg

**CITY OF EUREKA, MO**
**WATER QUALITY ANALYSIS SUMMARY**
**Well No. 8**

| | | Raw | | | | Finished | | | MCL |
|---|---|---|---|---|---|---|---|---|---|
| **Date:** | | 10/24/2017 | 8/28/2018 | | | 5/22/2017 | 10/24/2017 | 8/28/2018 | |
| **Field Parameters** | | | | | | | | | |
| Temperature | ºC/ºF | - | | | | - | - | | |
| pH[4] | | - | | | | 6.95 | - | | |
| **Other Parameters** | | | | | | | | | |
| Solids, Total Dissolved | mg/L | 828.00 | 834.00 | | | 856.00 | 780.00 | 827.00 | 500 [3] |
| Total Organic Carbon | mg/L | <0.5 | | | | - | <0.5 | | |
| Turbidity | NTU | <0.2 | | | | - | <0.2 | | |
| **General Chemistry** | | | | | | | | | |
| Alkalinity, as $CaCO_3$ | mg/L | 274.00 | 272.00 | | | 278.00 | 276.00 | 286.00 | |
| Calcium, total | mg/L | 84.80 | 87.00 | | | 14.30 | 32.90 | 29.20 | |
| Chloride | mg/L | 307.00 | 325.00 | | | 290.00 | 302.00 | 299.00 | 250 [3] |
| Fluoride | mg/L | 0.50 | | | | 0.60 | 0.80 | | 4 |
| Hardness, Total as $CaCO_3$ | mg/l | 365.00 | 377.00 | | | 63.70 | 151.00 | 152.00 | |
| Iron, total | mg/L | <0.05 | | | | - | <0.05 | | 0.3 [3] |
| Magnesium, total | mg/L | 37.30 | 38.90 | | | 6.79 | 16.80 | 19.20 | |
| Manganese, total | mg/L | <0.05 | | | | - | <0.05 | | 0.05 [3] |
| Nitrogen, Ammonia | mg/L | <0.14 | | | | - | <0.14 | | |
| Nitrogen, Nitrite | mg/L | <0.1 | | | | <0.1 | <0.1 | | 10 |
| Sulfide, total | mg/L | <0.05 | | | | - | <0.5 | | |
| Sulfate | mg/L | 46.70 | 46.30 | | | 48.90 | 46.60 | 46.30 | 250 [3] |
| **Inorganics, Metals** | | | | | | | | | |
| Barium, total | mg/L | - | | | | <0.05 | - | | 2 |
| Copper, total | mg/L | - | | | | <0.05 | - | | 1.3 (90%) |
| Lead, total | µg/L | - | | | | 0.60 | - | | 0.015 (90%) |
| Potassium, total | mg/L | - | | | | 5.03 | - | | |
| Sodium, total[4] | mg/L | - | 163.00 | | | 243.00 | - | 230.00 | |
| Zinc, total | mg/L | - | | | | <0.05 | - | | 5 [3] |
| **Radionuclides** | | | | | | | | | |
| Gross Alpha[4] | pCi/L | - | | | | 4.55 | - | | 15 |
| Radium-226 | pCi/L | - | | | | 0.25 | - | | 5 (226+228) |
| Radium-228 | pCi/L | - | | | | 0.61 | - | | 5 (226+228) |
| Combined Radium (226 &228)[4] | pCi/L | - | | | | 0.86 | - | | |
| **Disinfection By-Products** | | | | | | | | | |
| Total THMs | µg/L | - | | | | 0.70 | - | | 80 |
| Halo Acetic Acid 5 | µg/L | - | | | | 1.50 | - | | 60 |
| **Organics, Volatile Organic Chemicals (VOC)** | | | | | | | | | |
| Tetrachloroethylene | µg/L | - | | | | <0.5 | - | | 5 |
| Trichlorofluoromethane | µg/L | - | | | | <0.5 | - | | N.A. |

Highlighted Result Appears Abnormal

**CITY OF EUREKA, MO**
**WATER QUALITY ANALYSIS SUMMARY**
**Well No. 9**

| | | Raw | | | Finished | | | MCL |
|---|---|---|---|---|---|---|---|---|
| **Date:** | | 10/24/2017 | 8/28/2018 | | 5/22/2017 | 10/24/2017 | 8/28/2018 | |
| **Field Parameters** | | | | | | | | |
| Temperature | °C/°F | - | | | - | - | | |
| pH[4] | | - | | | 6.97 | - | | |
| **Other Parameters** | | | | | | | | |
| Solids, Total Dissolved | mg/L | 364.00 | 352.00 | | 440.00 | 404.00 | 414.00 | 500 [3] |
| Total Organic Carbon | mg/L | <0.5 | | | - | <0.5 | | |
| Turbidity | NTU | <0.2 | | | - | <0.2 | | |
| **General Chemistry** | | | | | | | | |
| Alkalinity, as $CaCO_3$ | mg/L | 294.00 | 304.00 | | 299.00 | 298.00 | 303.00 | |
| Calcium, total | mg/L | 74.30 | 47.80 | | 22.20 | 20.20 | 37.10 | |
| Chloride | mg/L | 24.50 | 28.10 | | 48.90 | 34.40 | 44.10 | 250 [3] |
| Fluoride | mg/L | 0.20 | | | 0.38 | 0.60 | | 4 |
| Hardness, Total as $CaCO_3$ | mg/l | 300.00 | 193.00 | | 90.60 | 82.80 | 152.00 | |
| Iron, total | mg/L | <0.05 | | | - | <0.05 | | 0.3 [3] |
| Magnesium, total | mg/L | 27.30 | 18.00 | | 8.54 | 7.90 | 14.30 | |
| Manganese, total | mg/L | <0.05 | | | - | <0.05 | | 0.05 [3] |
| Nitrogen, Ammonia | mg/L | <0.14 | | | - | <0.14 | | |
| Nitrogen, Nitrite | mg/L | 0.60 | | | 0.49 | 0.60 | | 10 |
| Sulfide, total | mg/L | <0.05 | | | - | <0.05 | | |
| Sulfate | mg/L | 24.20 | 23.90 | | 24.20 | 24.30 | 24.00 | 250 [3] |
| **Inorganics, Metals** | | | | | | | | |
| Barium, total | mg/L | - | | | <0.05 | - | | 2 |
| Copper, total | mg/L | - | | | 0.09 | - | | 1.3 (90%) |
| Lead, total | µg/L | - | | | <0.5 | - | | 0.015 (90%) |
| Potassium, total | mg/L | - | | | 1.40 | - | | |
| Sodium, total[4] | mg/L | - | 17.20 | | 147.00 | - | 109.00 | |
| Zinc, total | mg/L | - | | | 0.05 | - | | 5 [3] |
| **Radionuclides** | | | | | | | | |
| Gross Alpha[4] | pCi/L | - | | | 1.20 | - | | 15 |
| Radium-226 | pCi/L | - | | | -0.10 | - | | 5 (226+228) |
| Radium-228 | pCi/L | - | | | 0.18 | - | | 5 (226+228) |
| Combined Radium (226 &228)[4] | pCi/L | - | | | 0.18 | - | | |
| **Disinfection By-Products** | | | | | | | | |
| Total THMs | µg/L | - | | | 13.80 | - | | 80 |
| Halo Acetic Acid 5 | µg/L | - | | | 1.10 | - | | 60 |
| **Organics, Volatile Organic Chemicals (VOC)** | | | | | | | | |
| Tetrachloroethylene | µg/L | - | | | <0.5 | - | | 5 |
| Trichlorofluoromethane | µg/L | - | | | 2.10 | - | | N.A. |

Highlighted Result Appears Abnormal

**CITY OF EUREKA, MO**
**WATER QUALITY ANALYSIS SUMMARY**
**Well No. 10**

| | | Raw | | | Finished | | | | MCL |
|---|---|---|---|---|---|---|---|---|---|
| **Date:** | | 10/24/2017 | 8/29/2018 | | 5/22/2017 | 10/24/2017 | 8/17/2018 (Hawkins) | 8/29/2018 | |
| **Field Parameters** | | | | | | | | | |
| Temperature | °C/°F | - | | | - | - | 55 | | |
| pH[4] | | - | | | 6.89 | - | 7.43 | | |
| **Other Parameters** | | | | | | | | | |
| Solids, Total Dissolved | mg/L | 846.00 | 947.00 | | 889.00 | 848.00 | 973.58 | 928.00 | 500 [3] |
| Total Organic Carbon | mg/L | <0.5 | | | - | <0.5 | - | | |
| Turbidity | NTU | <0.2 | | | - | <0.2 | - | | |
| **General Chemistry** | | | | | | | | | |
| Alkalinity, as $CaCO_3$ | mg/L | 286.00 | 290.00 | | 285.00 | 283.00 | 274.00 | 297.00 | |
| Calcium, total | mg/L | 90.80 | 91.70 | | 7.03 | 28.90 | 48.64 | 23.30 | |
| Chloride | mg/L | 332.00 | 334.00 | | 322.00 | 321.00 | 262.00 | 334.00 | 250 [3] |
| Fluoride | mg/L | 0.30 | | | 0.36 | 0.60 | - | | 4 |
| Hardness, Total as $CaCO_3$ | mg/l | 377.00 | 383.00 | | 29.50 | 123.00 | 256.50 | 99.40 | |
| Iron, total | mg/L | <0.05 | | | - | <0.05 | <0.001 | | 0.3 [3] |
| Magnesium, total | mg/L | 36.40 | 37.40 | | 2.85 | 12.40 | 32.90 | 10.00 | |
| Manganese, total | mg/L | <0.05 | | | - | <0.05 | <0.001 | | 0.05 [3] |
| Nitrogen, Ammonia | mg/L | <0.14 | | | - | <0.14 | 0.01 | | |
| Nitrogen, Nitrite | mg/L | 0.60 | | | 0.51 | 0.60 | - | | 10 |
| Nitrogen, Nitrate | mg/L | - | | | - | - | 3.02 | | |
| Sulfide, total | mg/L | <0.05 | | | - | <0.05 | - | | |
| Sulfate | mg/L | 24.30 | 44.90 | | 46.70 | 44.10 | 45.00 | 44.50 | 250 [3] |
| **Inorganics, Metals** | | | | | | | | | |
| Barium, total | mg/L | - | | | 0.08 | - | - | | 2 |
| Copper, total | mg/L | - | | | 0.08 | - | 0.07 | | 1.3 (90%) |
| Lead, total | µg/L | - | | | 0.80 | - | <0.001 | | 0.015 (90%) |
| Potassium, total | mg/L | - | | | 1.59 | - | 3.39 | | |
| Sodium, total[4] | mg/L | - | 186.00 | | 313.00 | - | 207.30 | 356.00 | |
| Zinc, total | mg/L | - | | | <0.05 | - | 0.12 | | 5 [3] |
| **Radionuclides** | | | | | | | | | |
| Gross Alpha[4] | pCi/L | - | | | 5.13 | - | - | | 15 |
| Radium-226 | pCi/L | - | | | 0.97 | - | - | | 5 (226+228) |
| Radium-228 | pCi/L | - | | | 0.19 | - | - | | 5 (226+228) |
| Combined Radium (226 &228)[4] | pCi/L | - | | | 1.15 | - | - | | |
| **Disinfection By-Products** | | | | | | | | | |
| Total THMs | µg/L | - | | | 1.80 | - | - | | 80 |
| Halo Acetic Acid 5 | µg/L | - | | | 1.30 | - | - | | 60 |
| **Organics, Volatile Organic Chemicals (VOC)** | | | | | | | | | |
| Tetrachloroethylene | µg/L | - | | | <0.5 | - | - | | 5 |
| Trichlorofluoromethane | µg/L | - | | | <0.5 | - | - | | N.A. |

Highlighted Result Appears Abnormal

Red Total Hardness = Calculated from Ca + Mg

# City of Eureka

## Daily Field Data Log

## Well No. 1

| Date | pH (handheld) | OSEC pH (online) | Temp (F) | Alk. (mg/L) | Hardness (grains) | Hardness (mg/L CaCO3) | | Raw pH | Raw Temp (F) |
|---|---|---|---|---|---|---|---|---|---|
| 08/13/18 | 7.38 | | | | | | | | |
| 08/14/18 | 7.33 | 6.90 | 66 | 300 | 10.9 | 186 | | | |
| 08/15/18 | 7.39 | 6.91 | 61 | 300 | 9.7 | 166 | | | |
| 08/16/18 | 7.39 | 7.22 | 61 | 300 | 11.7 | 200 | | | |
| 08/17/18 | 7.34 | 7.23 | 60 | 320 | 10.0 | 171 | | | |
| 08/20/18 | 7.35 | 7.22 | 66 | 300 | 10.5 | 180 | | | |
| 08/21/18 | 7.50 | 7.23 | 59 | 300 | 10.0 | 171 | | | |
| 08/22/18 | 7.42 | 7.22 | 66 | 300 | 10.2 | 174 | | | |
| 08/23/18 | 7.42 | 7.23 | 65 | 320 | 10.2 | 174 | | | |
| 08/24/18 | 7.47 | 7.23 | 63 | 320 | 10.1 | 173 | | | |
| 08/28/18 | 7.38 | | 64 | | | | | 7.42 | 59 |
| 09/04/18 | 7.17 | 7.22 | 63 | 320 | 10.9 | 186 | | 7.15 | 59 |
| 09/05/18 | 7.21 | 7.23 | 61 | | 12.8 | 219 | | 7.17 | 59 |
| 09/06/18 | 7.22 | 7.23 | 61 | 320 | 9.9 | 169 | | 7.21 | 59 |
| 09/07/18 | 7.27 | 7.22 | 62 | | 10.6 | 181 | | 7.27 | 59 |
| 09/10/18 | | 7.23 | 59 | 320 | 12.2 | 209 | | | |
| 09/11/18 | 7.27 | 7.23 | 58 | 320 | 9.7 | 166 | | 7.42 | 60 |
| 09/12/18 | 7.25 | 7.29 | 60 | 320 | 10.4 | 178 | | 7.38 | 61 |
| 09/13/18 | 7.26 | 7.22 | 59 | 320 | 5.1 | 87 | | 7.33 | 61 |
| 09/14/18 | 7.17 | 7.22 | 65 | 320 | 10.1 | 173 | | 7.31 | 59 |
| 09/17/18 | 7.19 | 7.22 | 66 | 280 | 6.2 | 106 | | 7.23 | 61 |
| 09/18/18 | 7.25 | 7.23 | 65 | 320 | 9.0 | 154 | | 7.36 | 61 |
| 09/19/18 | 7.25 | 7.23 | 65 | 320 | 14.2 | 243 | | 7.27 | 59 |
| 09/20/18 | 7.34 | 7.23 | 64 | | 9.1 | 156 | | 7.38 | 61 |
| 09/21/18 | 7.30 | 7.26 | 61 | 320 | 11.0 | 188 | | 7.29 | 59 |
| 09/24/18 | 7.30 | 7.23 | 62 | 320 | 12.0 | 205 | | 7.30 | 59 |
| | | | | | | | | | |
| Min | | | | | | | | 7.15 | |
| Average | 7.31 | 7.20 | 62 | 312 | 10.3 | 176 | | 7.30 | 60 |
| Max | | | | | | | | 7.42 | |

# City of Eureka
## Daily Field Data Log
## Well No. 5

| Date | pH (handheld) | OSEC pH (online) | Temp (F) | Alk. (mg/L) | Hardness (grains) | Hardness (mg/L CaCO3) | | Raw pH | Raw Temp (F) |
|---|---|---|---|---|---|---|---|---|---|
| 08/13/18 | 7.29 | | | | | | | | |
| 08/14/18 | 7.33 | 7.22 | 54 | 290 | 9.0 | 154 | | | |
| 08/15/18 | 7.39 | 7.19 | 54 | 320 | 10.1 | 173 | | | |
| 08/16/18 | 7.42 | 7.1 | 55 | 300 | 7.0 | 120 | | | |
| 08/17/18 | 7.39 | 6.89 | 54 | 340 | 9.1 | 156 | | | |
| 08/20/18 | 7.30 | 6.89 | 54 | 300 | 12.2 | 209 | | | |
| 08/21/18 | 7.38 | 6.9 | 54 | 340 | 11.2 | 192 | | | |
| 08/22/18 | 7.41 | 6.89 | 55 | 320 | 13.1 | 224 | | | |
| 08/23/18 | 7.46 | 6.9 | 54 | 320 | 12.1 | 207 | | | |
| 08/24/18 | 7.51 | 6.9 | 54 | 320 | 12.1 | 207 | | | |
| 08/25/18 | 7.32 | | 61 | | | | | 7.33 | 59 |
| 09/04/18 | 7.11 | 6.92 | 61 | 320 | 5.9 | 101 | | 7.07 | 58 |
| 09/05/18 | 7.20 | 6.94 | 61 | | 10.9 | 186 | | 7.19 | 58 |
| 09/06/18 | 7.24 | 6.98 | 59 | 320 | 13.4 | 229 | | 7.27 | 58 |
| 09/07/18 | 7.23 | 7.09 | 59 | | 11.1 | 190 | | 7.39 | 58 |
| 09/10/18 | | 7.09 | 57 | 320 | 5.1 | 87 | | | |
| 09/11/18 | 7.18 | 7.09 | 54 | 340 | 5.9 | 101 | | 7.32 | 58 |
| 09/12/18 | 7.27 | 7.09 | 53 | 320 | 5.4 | 92 | | 7.43 | 59 |
| 09/13/18 | 7.20 | 7.09 | 54 | 300 | 6.5 | 111 | | 7.41 | 60 |
| 09/14/18 | 7.20 | 7.02 | 54 | 320 | 7.1 | 121 | | 7.14 | 60 |
| 09/17/18 | 7.20 | 7.09 | 54 | 340 | 8.3 | 142 | | 7.24 | 59 |
| 09/18/18 | 7.21 | 7.09 | 54 | 320 | 9.2 | 157 | | 7.23 | 59 |
| 09/19/18 | 7.24 | 7.09 | 54 | 300 | 14.2 | 243 | | 7.26 | 59 |
| 09/20/18 | 7.25 | 7.11 | 59 | | 8.6 | 147 | | 7.17 | 59 |
| 09/21/18 | 7.24 | 7.09 | 59 | 300 | 9.8 | 168 | | 7.23 | 59 |
| 09/24/18 | 7.29 | 7.09 | 59 | 300 | 6.5 | 111 | | 7.27 | 59 |
| | | | | | | | | | |
| Min | | | | | | | | 7.07 | |
| Average | 7.29 | 7.03 | 56 | 317 | 9.3 | 159 | | 7.26 | 59 |
| Max | | | | | | | | 7.43 | |

# City of Eureka
## Daily Field Data Log
## Well No. 6

| Date | pH (handheld) | OSEC pH (online) | Temp (F) | Alk. (mg/L) | Hardness (grains) | Hardness (mg/L CaCO3) | | Raw pH | Raw Temp (F) |
|---|---|---|---|---|---|---|---|---|---|
| 08/13/18 | 7.49 | 7.31 | 61 | | 12.0 | | | | |
| 08/14/18 | 7.45 | 7.44 | 61 | 320 | 10.9 | 186 | | | |
| 08/15/18 | 7.44 | 7.27 | 60 | 300 | 8.6 | 147 | | | |
| 08/16/18 | 7.44 | 7.3 | 61 | 300 | 8.6 | 147 | | | |
| 08/20/18 | 7.47 | 7.31 | 61 | 320 | | | | | |
| 08/21/18 | 7.50 | 7.31 | 61 | 320 | 10.0 | 171 | | | |
| 08/22/18 | 7.46 | 7.31 | 62 | 300 | 5.2 | 89 | | | |
| 08/23/18 | 7.50 | 7.27 | 60 | 300 | 5.3 | 91 | | | |
| 08/24/18 | 7.49 | 7.31 | 60 | 320 | 7.0 | 120 | | | |
| 08/28/18 | 7.51 | | 62 | | | | | 7.46 | 61 |
| 09/04/18 | 7.26 | 7.35 | 60 | 300 | 8.6 | | | 7.25 | 60 |
| 09/05/18 | 7.31 | | 62 | | 9.0 | 154 | | 7.28 | 60 |
| 09/06/18 | 7.36 | 7.21 | 62 | 300 | 8.0 | 137 | | 7.34 | 60 |
| 09/07/18 | 7.35 | 7.25 | 62 | | 6.4 | 109 | | 7.37 | 60 |
| 09/10/18 | | 7.23 | 60 | 300 | 6.7 | | | | |
| 09/11/18 | 7.45 | 7.34 | 60 | 300 | 7.6 | 130 | | 7.43 | 60 |
| 09/12/18 | 7.29 | 7.34 | 61 | 300 | | | | 7.47 | 61 |
| 09/13/18 | 7.32 | 7.27 | 60 | 300 | 9.8 | 168 | | 7.44 | 62 |
| 09/14/18 | 7.25 | 7.22 | 62 | 300 | 6.8 | 116 | | 7.43 | 63 |
| 09/17/18 | 7.33 | 7.23 | 59 | 280 | 7.0 | 120 | | 7.43 | 64 |
| 09/18/18 | 7.31 | 7.31 | 60 | 300 | 6.9 | 118 | | 7.46 | 66 |
| 09/19/18 | 7.43 | 7.3 | 61 | 240 | 7.7 | 132 | | 7.52 | 63 |
| 09/20/18 | 7.38 | 7.33 | 61 | | 7.0 | 120 | | 7.35 | 62 |
| 09/21/18 | 7.38 | 7.3 | 63 | 300 | 6.6 | 113 | | 7.37 | 61 |
| 09/24/18 | 7.39 | 7.31 | 63 | 300 | 9.1 | 156 | | 7.52 | 63 |

| | | | | | | | | |
|---|---|---|---|---|---|---|---|---|
| Min | | | | | | | 7.25 | |
| Average | 7.40 | 7.30 | 61 | 300 | 7.9 | 133 | 7.41 | 62 |
| Max | | | | | | | 7.52 | |

# City of Eureka
## Daily Field Data Log
## Well No. 8

| Date | pH (handheld) | OSEC pH (online) | Temp (F) | Alk. (mg/L) | Hardness (grains) | Hardness (mg/L CaCO3) | | Raw pH | Raw Temp (F) |
|---|---|---|---|---|---|---|---|---|---|
| 08/13/18 | 7.45 | | | | | | | | |
| 08/14/18 | 7.46 | 7.73 | 62 | 320 | 9.1 | 156 | | | |
| 08/15/18 | 7.46 | 7.78 | 61 | 340 | 13.2 | 226 | | | |
| 08/16/18 | 7.50 | 7.21 | 64 | 320 | 11.3 | 193 | | | |
| 08/17/18 | 7.43 | 7.25 | 61 | 340 | 9.9 | 169 | | | |
| 08/20/18 | 7.47 | 7.27 | 62 | 300 | 8.0 | 137 | | | |
| 08/21/18 | 7.55 | 7.22 | 62 | 340 | 6.4 | 109 | | | |
| 08/22/18 | 7.48 | 7.2 | 62 | 340 | 11.5 | 197 | | | |
| 08/23/18 | 7.54 | 7.27 | 61 | 320 | 7.1 | 121 | | | |
| 08/24/18 | 7.51 | 7.29 | 61 | 300 | 9.1 | 156 | | | |
| 08/28/18 | 7.46 | | 60 | | | | | 7.41 | 60 |
| 09/04/18 | 7.31 | 7.18 | 60 | 300 | 4.9 | 84 | | 7.21 | 60 |
| 09/05/18 | 7.35 | 7.18 | 61 | | 11.0 | 188 | | 7.33 | 60 |
| 09/06/18 | 7.38 | 7.2 | 61 | 320 | 5.4 | 92 | | 7.31 | 60 |
| 09/07/18 | 7.35 | 7.21 | 60 | | 6.4 | 109 | | 7.33 | 60 |
| 09/10/18 | | 7.3 | 60 | 320 | 8.7 | 149 | | | |
| 09/11/18 | 7.33 | 7.3 | 61 | 340 | 11.2 | 192 | | 7.32 | 62 |
| 09/12/18 | 7.39 | 7.22 | 62 | 300 | 8.1 | 139 | | 7.33 | 60 |
| 09/13/18 | 7.36 | 7.22 | 62 | 320 | 10.0 | 171 | | 7.33 | 61 |
| 09/14/18 | 7.26 | 7.22 | 61 | 320 | 10.0 | 171 | | 7.25 | 60 |
| 09/17/18 | 7.29 | 7.3 | 62 | 280 | 11.0 | 188 | | 7.23 | 63 |
| 09/18/18 | 7.30 | 7.21 | 61 | 300 | 8.0 | 137 | | 7.28 | 61 |
| 09/19/18 | 7.33 | 7.21 | 60 | 320 | 9.8 | 168 | | 7.37 | 62 |
| 09/20/18 | 7.40 | 7.31 | 63 | | 13.1 | 224 | | 7.35 | 63 |
| 09/21/18 | 7.30 | 7.3 | 62 | 300 | 11.0 | 188 | | 7.39 | 60 |
| 09/24/18 | 7.41 | 7.3 | 62 | 300 | 12.0 | 205 | | 7.33 | 62 |
| Min | | | | | | | | 7.21 | |
| Average | 7.40 | 7.29 | 61 | 316 | 9.4 | 161 | | 7.32 | 61 |
| Max | | | | | | | | 7.41 | |

# City of Eureka
## Daily Field Data Log
## Well No. 9

| Date | pH (handheld) | OSEC pH (online) | Temp (F) | Alk. (mg/L) | Hardness (grains) | Hardness (mg/L CaCO3) | | Raw pH | Raw Temp (F) |
|---|---|---|---|---|---|---|---|---|---|
| 08/13/18 | | | | | 7.8 | | | | |
| 08/14/18 | 7.56 | 7.4 | 67 | 340 | 8.7 | 149 | | | |
| 08/15/18 | 7.50 | 7.41 | 68 | 360 | 8.4 | 144 | | | |
| 08/16/18 | 7.54 | 7.24 | 67 | 340 | 8.2 | 140 | | | |
| 08/17/18 | 7.44 | 7.17 | 67 | 340 | 8.6 | 147 | | | |
| 08/20/18 | 7.40 | 7.12 | 67 | 340 | 9.0 | 154 | | | |
| 08/21/18 | 7.60 | 7.15 | 68 | 300 | 9.0 | 154 | | | |
| 08/22/18 | 7.60 | 7.11 | 67 | 300 | 8.9 | 152 | | | |
| 08/23/18 | 7.57 | 7.17 | 66 | 340 | 8.8 | 150 | | | |
| 08/24/18 | 7.59 | 7.11 | 68 | 320 | 8.5 | 145 | | | |
| 08/28/18 | 7.45 | | | | | | | 7.43 | 58 |
| 09/04/18 | 7.28 | 7.18 | 66 | 360 | 10.0 | 171 | | 7.25 | 59 |
| 09/05/18 | 7.28 | 7.18 | 66 | | 10.0 | 171 | | 7.27 | 58 |
| 09/06/18 | 7.28 | 7.18 | 66 | 320 | 10.0 | 171 | | 7.31 | 58 |
| 09/07/18 | 7.34 | 7.18 | 68 | | 11.0 | 188 | | 7.33 | 58 |
| 09/10/18 | | 7.2 | 68 | 340 | 10.0 | 171 | | | |
| 09/11/18 | 7.33 | 7.2 | 69 | 340 | 8.7 | 149 | | 7.27 | 60 |
| 09/12/18 | 7.39 | 7.2 | 67 | 320 | 9.0 | 154 | | 7.39 | 59 |
| 09/13/18 | 7.36 | 7.21 | 67 | 340 | 9.2 | 157 | | 7.34 | 61 |
| 09/14/18 | 7.27 | 7.23 | 66 | 320 | 9.1 | 156 | | 7.32 | 61 |
| 09/17/18 | 7.40 | 7.2 | 68 | 300 | 10.0 | 171 | | 7.21 | 64 |
| 09/18/18 | 7.39 | 7.2 | 67 | 300 | 9.7 | 166 | | 7.33 | 61 |
| 09/19/18 | 7.37 | 7.2 | 68 | 320 | 9.2 | 157 | | 7.36 | 62 |
| 09/20/18 | 7.37 | 7.14 | 65 | | 9.4 | 161 | | 7.33 | 65 |
| 09/21/18 | 7.34 | 7.17 | 65 | 340 | 9.2 | 157 | | 7.33 | 62 |
| 09/22/18 | | | 65 | | | | | | |
| 09/24/18 | 7.39 | 7.16 | 65 | 360 | 9.3 | 159 | | 7.38 | 58 |

| | | | | | | | | |
|---|---|---|---|---|---|---|---|---|
| Min | | | | | | | 7.21 | |
| Average | 7.42 | 7.20 | 67 | 330 | 9.2 | 158 | 7.32 | 60 |
| Max | | | | | | | 7.43 | |

# City of Eureka
## Daily Field Data Log
## Well No. 10

| Date | pH (handheld) | OSEC pH (online) | Temp (F) | Alk. (mg/L) | Hardness (grains) | Hardness (mg/L CaCO3) | | Raw pH | Raw Temp (F) |
|---|---|---|---|---|---|---|---|---|---|
| 08/13/18 | 7.51 | | | | | | | | |
| 08/14/18 | 7.42 | 7.45 | 57 | | 6.6 | 113 | | | |
| 08/15/18 | 7.40 | 7.46 | 55 | 320 | 17.0 | 291 | | | |
| 08/16/18 | 7.36 | 7.45 | 56 | 340 | 9.6 | 164 | | | |
| 08/17/18 | 7.44 | 7.21 | 56 | 320 | 5.1 | 87 | | | |
| 08/20/18 | 7.57 | 7.2 | 56 | 340 | 4.6 | 79 | | | |
| 08/21/18 | 7.44 | 7.18 | 55 | 320 | 14.6 | 250 | | | |
| 08/22/18 | 7.51 | 7.17 | 55 | 340 | 18.6 | 318 | | | |
| 08/23/18 | 7.52 | 7.22 | 55 | 320 | 4.2 | 72 | | | |
| 08/24/18 | 7.52 | 7.24 | 55 | 320 | 6.1 | 104 | | | |
| 08/28/18 | 7.37 | | 62 | 320 | 6.1 | 104 | | 7.36 | 59 |
| 09/04/18 | 7.17 | 7.22 | 63 | 300 | 6.1 | 104 | | 7.25 | 59 |
| 09/05/18 | 7.17 | 7.22 | 60 | | 18.5 | 316 | | 7.25 | 59 |
| 09/06/18 | 7.19 | 7.2 | 61 | 380 | 14.6 | 250 | | 7.25 | 59 |
| 09/07/18 | 7.27 | 7.23 | 60 | | 7.5 | 128 | | 7.35 | 60 |
| 09/10/18 | | 7.23 | 59 | 320 | 25.8 | 441 | | | |
| 09/11/18 | 7.14 | 7.13 | 56 | 320 | 7.5 | 128 | | 7.33 | 60 |
| 09/12/18 | 7.22 | 7.12 | 55 | 280 | 17.0 | 291 | | 7.37 | 61 |
| 09/13/18 | 7.27 | 7.13 | 54 | 280 | 7.6 | 130 | | 7.32 | 60 |
| 09/14/18 | 7.26 | 7.15 | 54 | 320 | 7.1 | 121 | | 7.37 | 60 |
| 09/17/18 | 7.40 | 7.12 | 57 | 280 | 14.2 | 243 | | 7.56 | 59 |
| 09/18/18 | 7.32 | 7.12 | 57 | 320 | 14.7 | 251 | | 7.47 | 60 |
| 09/19/18 | 7.28 | 7.12 | 57 | 320 | 14.6 | 250 | | 7.58 | 61 |
| 09/20/18 | 7.33 | 7.04 | 60 | | 15.9 | 272 | | 7.44 | 60 |
| 09/21/18 | 7.33 | 7.12 | 61 | 320 | 9.7 | 166 | | 7.49 | 59 |
| 09/24/18 | 7.41 | 7.06 | 60 | 300 | 7.0 | 120 | | 7.45 | 60 |

| | | | | | | | | |
|---|---|---|---|---|---|---|---|---|
| Min | | | | | | | 7.25 | |
| Average | 7.35 | 7.20 | 57 | 318 | 11.2 | 192 | 7.39 | 60 |
| Max | | | | | | | 7.58 | |

# Eureka PWS Corrosion Indicies

| Sample Information | | Water Quality Input | | | | | | | Modeled Water Quality | | | | | | | | |
|---|---|---|---|---|---|---|---|---|---|---|---|---|---|---|---|---|---|
| Name / ID | Date | TDS (mg/L) | Field pH | Alkalinity | Calcium (mg/L) | Field Temp ($^oC$) | Chloride mg/L | Sulfate mg/L | $CO_2$ (mg/L) | DIC (mg/L) | Aggressive Index | Ryznar Index | Langelier Index | CCPP mg/L | Buffer Intensity | Larson-Skold | CSMR |
| | | | | | | | | | | | | | | | | | |
| Eureka Well #1, RO Blend | σ Aug 2018 | 301 | 6.65 | 92.1 | 28.8 | 17.2 | 88.0 | 12.5 | 41.9 | 33.5 | 10.5 | **9.44** | **-1.40** | -71.4 | 1.450 | 0.67 | 7.06 |
| Eureka Well #5, RO Blend | σ Aug 2018 | 385 | 6.49 | 95.1 | 28.6 | 12.2 | 148.0 | 18.4 | 68.1 | 41.4 | 10.3 | **9.78** | **-1.64** | -112 | 1.960 | 0.42 | 8.04 |
| Eureka Well #6, RO Blend | σ Aug 2018 | 385 | 6.81 | 93.0 | 28.6 | 16.1 | 157.0 | 14.6 | 29.5 | 30.4 | 10.6 | **9.36** | **-1.27** | -52.5 | 1.140 | 0.39 | 10.74 |
| Eureka Well #8, RO Blend | σ Aug 2018 | 301 | 6.86 | 97.2 | 28.1 | 16.7 | 106.0 | 16.0 | 27.5 | 30.8 | 10.7 | **9.23** | **-1.18** | -47.7 | 1.090 | 0.58 | 6.62 |
| Eureka Well #9, IX Finished | σ Aug 2018 | 422 | 7.21 | 331.0 | 36.4 | 19.4 | 41.7 | 24.3 | 39.3 | 90.1 | 11.7 | **7.61** | -0.20 | -15.6 | 1.820 | **3.94** | 1.72 |
| Eureka Well #10, RO Blend | σ Aug 2018 | 318 | 6.79 | 98.4 | 28.3 | 13.3 | 109.0 | 14.8 | 34.8 | 33.1 | 10.6 | **9.39** | **-1.30** | -60.3 | 1.300 | 0.58 | 7.36 |
| | | | | | | | | | | | | | | | | | |

# APPENDIX B

# RO Equipment Data

**From:** Julie Nemeth <JuliaNemeth@harnrosystems.com>
**Sent:** Friday, September 28, 2018 2:25 PM
**To:** Brian Hoellein; Kyle Jennings
**Cc:** Mikael Brown
**Subject:** RE: Eureka MO - Potential RO Systems
**Attachments:** Eureka Well 5 6 elem. proj..pdf; Eureka Well 5 5 elem. proj..pdf; Aledo-14x7-6M-648,000gpd.pdf

**Categories:** Filed by Newforma

Hi Brian, attached are two projections, modeled on the Well 5 water quality and based on the availability of about 900 gpm of well flow available for treatment and blend. The 6-element long vessel design is based on 525 gpm permeate flow and 195 gpm by-pass flow. The blended product flow meets the finished water quality targets we discussed on the phone. The good news is, the 6-element long option is a 14:7 array, which is the maximum size that can be shipped "assembled". I've attached a drawing of an example 14:7 6M array. The overall skid dimensions are 24'L x 7'6"W x 11'H. This drawing doesn't incorporate an interstage boost pump, which we'd recommend, but it would be tucked to the side and wouldn't take up much room.

The second projection is for 5-element long vessels and uses concentrate recycle to get the 75% recovery. I reduced the flux rate for this projection to keep the feed pressure down. You'll note the effective feed water TDS increases from the native 1398 mg/l to 1591 mg/l. The array for the same flows as the 6-element design would have to be an 18:8 array. This would be too big to ship assembled, so it would be costlier to build, ship and install. We don't have any drawings for an 18:8 array with 5 element vessels, but we estimate the overall dimensions would be 21'L x 7'6" W x 14'H – if you wanted tall and thin; or 21'L x 10'W x 10'H if you wanted short and fat.

I have estimated the budget cost for the two options. I estimate the budget cost for the 6-element vessel design at $495,000 to $575,000. I estimate the budget cost for the 5-element vessel design at $575,000 to $695,000. This budgetary cost would include the cartridge filters; high pressure R/O feed pumps; epoxy-coated, fiberglass R/O support frame; pressure vessels; membrane elements; skid piping and valving; R/O instrumentation and controls; scale inhibitor feed system, and installation supervision. It would not include the building, the raw water feed facilities, interconnecting piping, main SCADA system, post-treatment systems, or finished water storage or pumping.

Services that would be provided include preparation of engineering submittals, providing Operation and Maintenance manuals, and operator training. Please note the cost can vary tremendously depending on type of equipment selected, level of instrumentation and controls desired, incorporation of specialty items such as energy recovery devices, local construction considerations, and degree of redundancy required in equipment. The budget estimate for the mobile cleaning equipment (loose, able to be installed on an owner-provided trailer, and not including any electrical equipment), would be about $75,000 to $85,000.

This is a planning level estimate and we try to be conservative for budgetary purposes. We hope this helps with your planning process. Thank you again for contacting Harn R/O. If we can provide additional information please let me know.

Thanks,

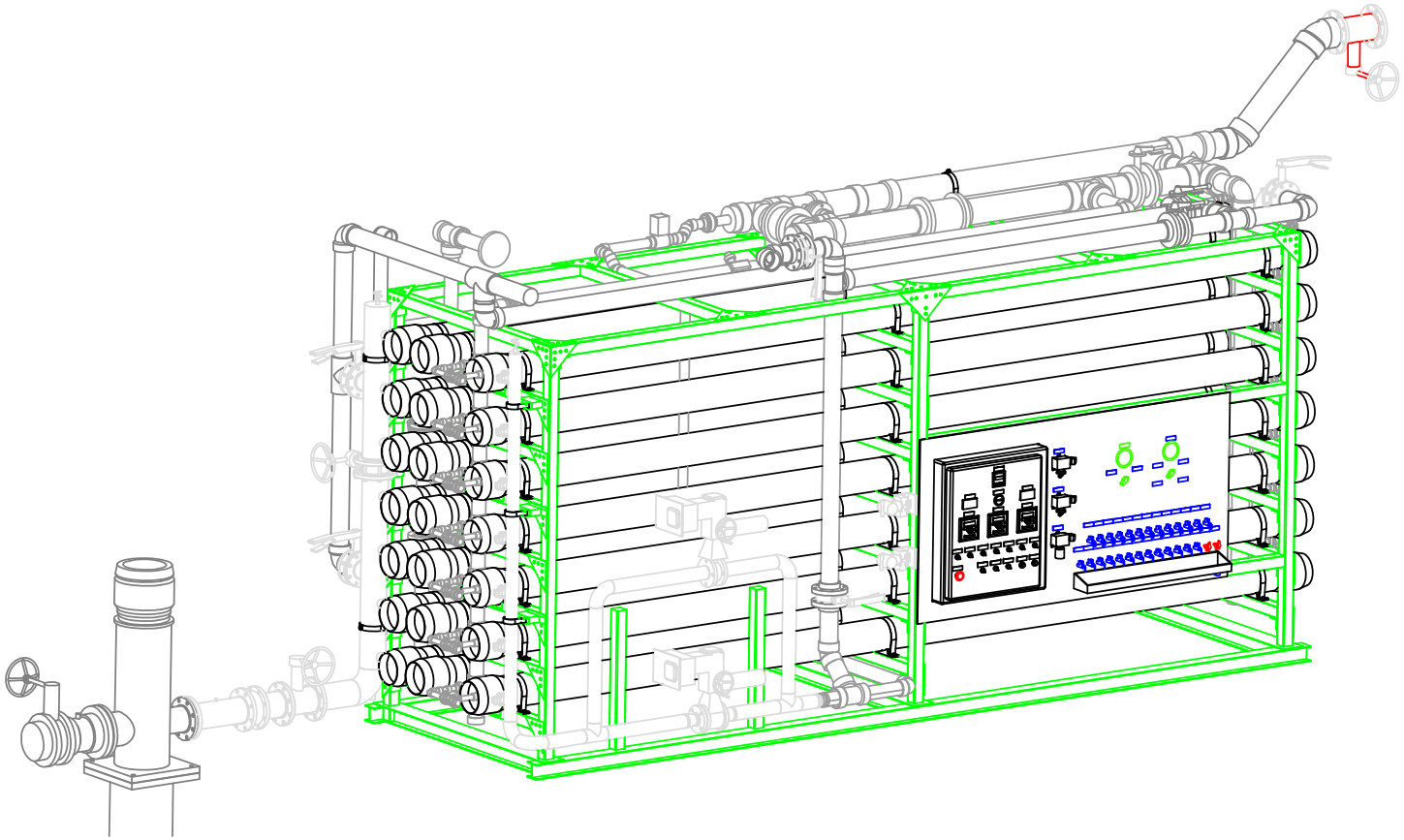

Harn R/O SYSTEMS INC.

ARRAY: **14 X 7 (With 1st Stage Back Pressure)**

VESSEL: **6 Element Codeline™ 80A30**

R/O TRAIN PRODUCTION: **648,000 GPD**

CLEANING CONNECTION TYPE: **Hard Pipe**

JOB : **00-1174C**

JOB NAME: **Aledo**

LOCATION: **Aledo, IL.**

Skid overall length 24'

OVERALL DIMENSIONS: **X 7-6"W X 11'H**

**(Without Pump Assembly)**

# REVERSE OSMOSIS TREATMENT SYSTEMS

**Project Name:** City of Eureka, Missouri

**Proposal number:** U5077

**Revision Number:** 0

**Date: October 4, 2018**


**Submitted To**

Brian Hoellein

Bartlett & West

**Submitted by**

Samantha Kendrick, P. Eng.

$H_2O$ Innovation, Inc.

5500 North Service Rd., Suite 207

Burlington, ON L7L 6W6

289-259-7917

Samantha.kendrick@h2oinnovation.com

**Represented by:**

Joe Maris

Ray Lindsey Company

17221 Bel Ray Place

Belton, MO 64012

913-620-5005

jmaris@raylindsey.com

## TABLE OF CONTENTS

Table of Contents ..... 2
SECTION 1 – Technical Approach ..... 3
1.1 Design configuration ..... 3
1.2 RO system configuration ..... 3
SECTION 2 – Scope of Supply ..... 4
2.1 Scope details ..... 4
2.2 Commissioning and support Personnel ..... 6
2.3 Automation and control system ..... 6
2.4 Intelogx™ ..... 7
SECTION 3 – Pricing Information ..... 9
3.1 Cost estimate ..... 9

Appendix A – Proposed RO Design Flows and Quality
Appendix B – General Arrangement Drawings – 3S RO and 4S RO standard skids
Appendix C – Membrane Projections (each well)

# SECTION 1 – TECHNICAL APPROACH

## 1.1 DESIGN CONFIGURATION

$H_2O$ Innovation is pleased to submit our budgetary proposal for a 6 reverse osmosis (RO) treatment systems capable of a total 3.69 MGD of permeate production. The following subsections provide the design configuration, on each train, for the 2-stage RO system operating at 80 % recovery.

## 1.2 RO SYSTEM CONFIGURATION

| Description | Value | Unit |
|---|---|---|
| Total # of RO trains installed | 6 | - |
| Production capacity | 3.69 | MGD |
| Overall system recovery | 80 | % |
| Array for well #1 | 16:8 | - |
| Array for well #5 | 16:8 | |
| Array for well #6 | 10:5 | |
| Array for well #8 | 12:6 | |
| Array for well #9 | 12:6 | |
| Array for well #10 | 14:7 | |
| Membranes per pressure vessel | 6 | - |
| Flux | 12-13 | GFD |
| Quantity of membranes | 720 | - |

Trains with a 16:8 or 14:7 array will be offered on 4S RO skid; trains with a 12:6 or 10:5 array will be offered on a 3S RO skid. See **general assembly drawings in Appendix 2** for more information. $H_2O$ 3S skid dimensions are **22.5 x 8.75 x 8.3 feet** while the 4S dimensions are **22.5 x 8.75 x 9.3 feet**.

# SECTION 2 – SCOPE OF SUPPLY

## 2.1 SCOPE DETAILS

To provide clarity on the scope of supply we have proposed for the system, please see the bullet points below for each piece of equipment. All equipment not described below is entirely by others.

**Reverse osmosis system, including,**

- Six (6) Cartridge filter and feed system
    - Six (6) 5µm cartridge filters, skidded
    - Six (6) RO feed pumps, skidded
    - Instruments, valves and piping, skidded
    - Junction box if required, skidded
- Six (6) reverse osmosis trains on skids, each comprising
    - Pressure vessels and reverse osmosis elements arranged in a 16:8 array, 14:7, 12:6 or 10:5 array according to the flow rate - 6 membranes per pressure vessel, skidded
    - Instruments, valves and piping, skidded
    - Main control panel with PLC, skidded

**Clean in place (CIP) system**

- One (1) CIP system, including
    - One (1) CIP pump, skidded
    - One (1) 5µm cartridge filter, skidded
    - One (1) clean in place tank, skidded
    - One (1) heater, skidded
    - Instruments, valves and piping, skidded
    - Remote IO panel , skidded

**Antiscalant dosing kit**

- Six (6) antiscalant dosing kit, each kit including
    - Two (2) chemical dosing pumps, skidded
    - One (1) chemical tank, skidded
    - Instruments, valves and piping, skidded
    - One (1) junction box, skidded

**PLC & Remote I/O Panels**

- Main control panel with Allen Bradley PLC, 17” colour touch screen HMI with industrial PC
- Remote I/O panels for, RO trains, major ancillary components and associated control system
- In addition to the above, $H_2O$ Innovation will be providing the detailed control strategy and control software.

**Optional (not in base price)**

- Sodium bisulfite dosing kit, on each kit
    - Two (2) chemical dosing pumps, skidded
    - One (1) chemical tank, skidded
    - Instruments, valves and piping, skidded
    - One (1) junction box, skidded

The following equipment is assumed to be in the scope of supply by others at this time. As the design progresses, we would be happy to quote adders for additional scope as needed.

- Raw water supply pumping
- RO product water tank
- Post treatment and finished water pumping
- CIP trailer
- VFDs and any associated Motor Control Center
- Shipping Ex-Works, $H_2O$ manufacturing facility
- Commissioning
- Applicable taxes
- Interconnecting pipework and wiring
- Equipment installation
- Building, foundations, associated building envelop, M/E systems, site civil, etc.,
- Permitting

In addition to the above outlined scope, responsibilities for design submittals, equipment delivery, and warranty have been clarified as follows.

| General | Quantity of Skids | Quantity of Equipment | By $H_2O$ | By Others |
|---|---|---|---|---|
| Skids/Frames | N/A | | ✓ | |
| System P&IDs | | - | ✓ | |
| Process Flow Diagram | | - | ✓ | |
| Equipment skid general arrangement drawings | | - | ✓ | |
| Plant Control Narrative | | - | ✓ | |
| Delivery from $H_2O$ Innovation manufacturing facility to site | | - | | ✓ |
| One (1) Year Mechanical and Workmanship Warranty | | - | ✓ | |

## 2.2 COMMISSIONING AND SUPPORT PERSONNEL

$H_2O$ Innovation's commissioning and service team is comprised of 9 persons, who have a combined experience of over 60 years of field service in controls, mechanical troubleshooting and remote programming. Resumes of the personnel that will be involved in your project are provided as part of the proposal. We have assumed that the cost of the water sampling and analysis would be outside of $H_2O$ Innovation's scope during our time on site for the plant startup, commissioning and performance testing.

Our service team can be reached via phones for emergencies. In these cases, a person is on call to receive your requests 24/7. If this person cannot be reached immediately, we will strive to return your call and assist you in the shortest delay possible. Our service representative will then either be able to assist you or find the resources to solve your problem. For regular, non-emergency, support requests, such as planned part replacements or planned service visits, our team can also be reached by e-mail at service@h2oinnovation.com

At this stage in the project, we have not included commissioning and start-up for the proposed treatment system.

## 2.3 AUTOMATION AND CONTROL SYSTEM

$H_2O$ Innovation has provided an automation and controls system using an Allen Bradley PLC. A main control panel is provided along with remote I/O panels for the remaining skidded equipment and major ancillary equipment. The main control panel would include an industrial PC with 17" colour touch screen HMI.

It is assumed for this proposal that VFDs will be provided by others.

## 2.4 INTELOGX™

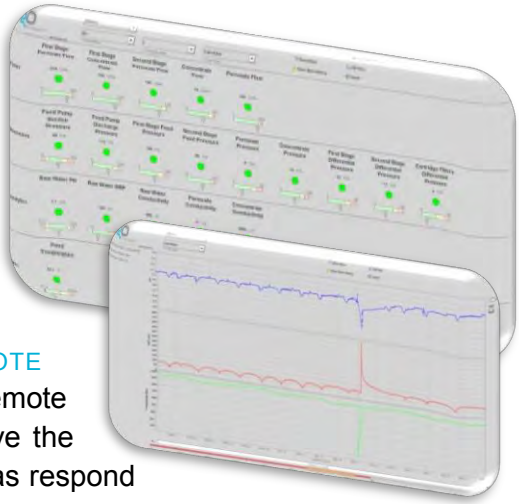

$H_2O$ Innovation has developed a remote monitoring system called the Intelogx™, which combines early detection of any issues that may arise, system optimization, remote troubleshooting and accessibility of systems, and common data storage all into one, simple platform.

There are three tiers of Intelogx™ that can be chosen: INTELOGX™ CONNECT, INTELOGX™ STANDARD, and INTELOGX™ PLUS +.

All three tiers of Intelogx™ are equipped with REMOTE OPERATIONS. With remote operation, you have online and remote access to HMI controls in real time. This allows you to have the ability to start, stop, and adjust operating setpoints, as well as respond to alarms from virtually anywhere.

With INTELOGX™ CONNECT, data acquisition and the general status of the health can be accessed.

DATA ACQUISITION – with data acquisition, you have the ability to log all your high-value tags, store data safely on $H_2O$'s servers, archive all alarms, and check the status of every analog signal available.

With INTELOGX™ STANDARD, all of what is offered with Intelogx™ Connect is provided along with data trending.

DATA TRENDING – with data trending, you can see the overall unit operation and health with graphs of the system's historical trends. In addition, plant alarm notifications can be sent via email and text message, different types of alarms can be sent to different people, and all trending and reports are available via web access.

With INTELOGX™ PLUS +, what is offered for the Intelogx™ Connect and Intelogx™ Standard is provided, along with performance analysis and suggestions for optimization.

PERFORMANCE ANALYSIS AND OPTIMIZATION - with performance analysis, weekly, monthly, and annual system performance reports can be generated, with review and analysis of the trends performed by one of our process engineers. If optimization of the system is required, our specialized technicians can provide on-site visits. Additionally, personalized and customized performance reports at set intervals can be provided.

An example of the performance reports is shown below and on the following page.

Performance analysis can be a short summary as shown below:

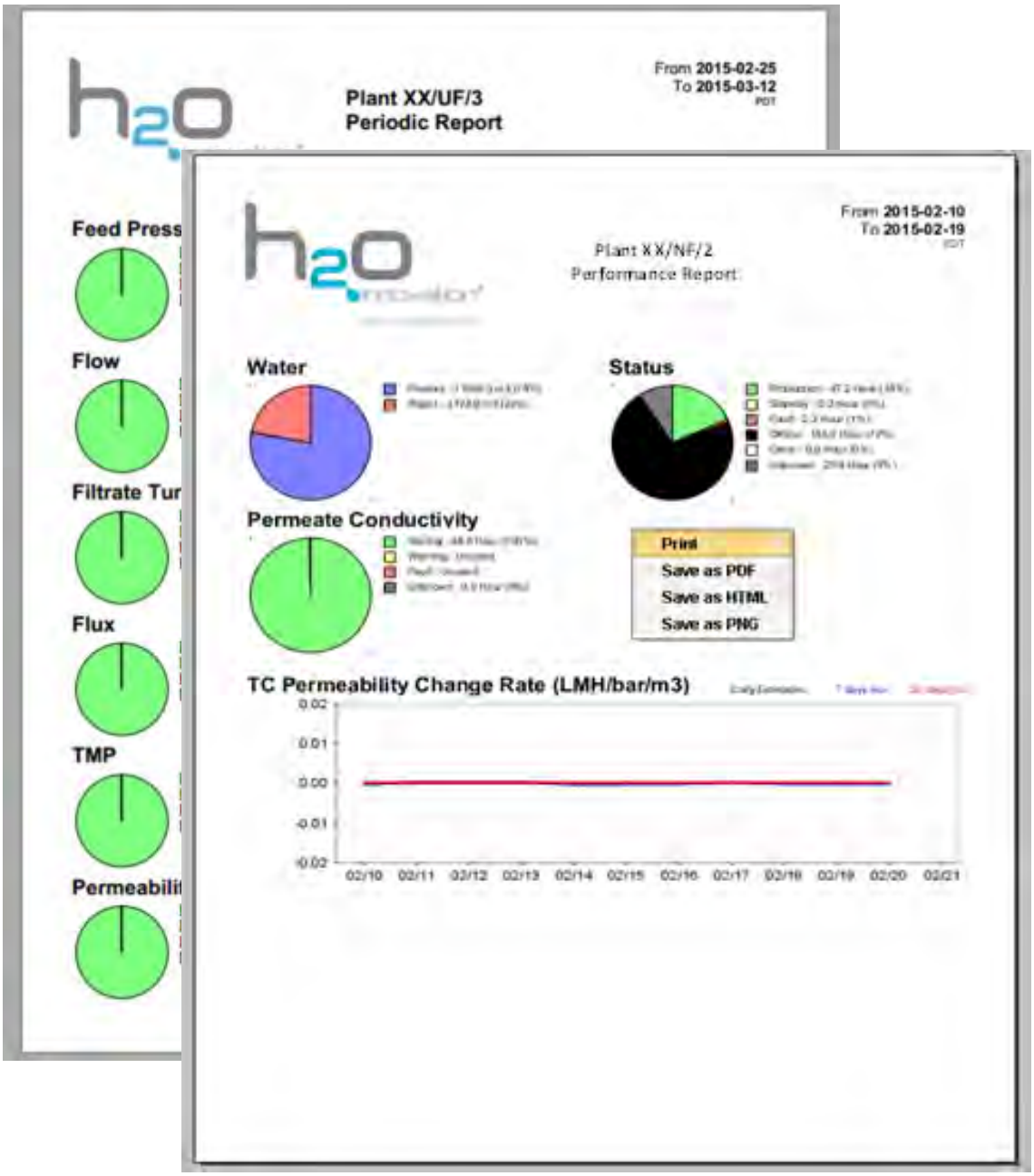


For more information on Intelogx™, please see our website at [www.h2oinnovation.com](http://www.h2oinnovation.com).

At this stage in the project, we have not included IntelogX for the proposed treatment system.

# SECTION 3 – PRICING INFORMATION

## 3.1 COST ESTIMATE

We are pleased to provide the following budgetary pricing for the scope of supply outlined in this proposal.

| Item | Lump Sum Pricing (USD) |
|---|---|
| RO treatment system complete with all ancillary equipment as outlined herein | $1,372,000 |
| Option #1 - Sodium bisulfite dosing kit, each kit | $9,120 |

(1) Pricing is exclusive of taxes.
(2) Shipping Ex-works, $H_2O$ Innovation manufacturing facility.

# APPENDIX A – PROPOSED RO DESIGN FLOWS AND QUALITY

| CRITERIA | | |
|---|---|---|
| | Min | Max |
| Hardness | 125 | 175 |
| TDS | | 500 |
| Chloride | | 250 |

| WATER QUALITY OF BLENDED WATER OF EACH WELLS ACCORDING TO PROJECTIONS | | | | | | | | | | | | | | | | | | | |
|---|---|---|---|---|---|---|---|---|---|---|---|---|---|---|---|---|---|---|---|
| WELLS | CONDITIONS | | | | | | ARRAY | AVG FLUX (GFD) | FEED PRESSURE | MEMBRANE | RAW WATER | | | PERMEATE | | | FINAL BLEND | | |
| | Raw water flow | % by pass | by pass flow | Recovery | Permeate flow | Blended flow | | | | | Hardness | TDS | Chloride | Hardness | TDS | Chloride | Hardness | TDS | Chloride |
| Well #1 | 1000 | 30% | 300 | 80% | 560 | 860 | 16:8_6_440 RO 4S+ | 12.7 | 140.7 | ESPA2-LD MAX | 348 | 925 | 263 | 2.1 | 17.2 | 3.5 | 122.7 | 333.9 | 94.0 |
| Well #5 | 1000 | 35% | 350 | 80% | 520 | 870 | 16:8_6_400 RO 4S+ | 13.0 | 136.3 | ESPA4-LD | 467 | 1432 | 544 | 1.6 | 75.1 | 29.1 | 188.7 | 621.0 | 236.3 |
| Well #6 | 600 | 35% | 210 | 80% | 312 | 522 | 10:5_6_400 RO 3S- | 12.5 | 129.6 | ESPA4-LD | 374 | 1264 | 476 | 1.2 | 65.4 | 24.9 | 151.0 | 547.6 | 206.4 |
| Well #8 | 700 | 35% | 245 | 80% | 364 | 609 | 12:6_6_400 RO 3S+ | 12.1 | 121.2 | ESPA4-LD | 377 | 1017 | 325 | 1.2 | 43.4 | 14.1 | 152.3 | 435.1 | 139.2 |
| Well #9 | 800 | 40% | 320 | 80% | 384 | 704 | 12:6_6_400 RO 3S+ | 12.8 | 115.8 | ESPA4-LD | 298 | 12.88 | 28.1 | 1.1 | 12.9 | 0.7 | 135.9 | 12.9 | 13.1 |
| Well #10 | 750 | 30% | 225 | 80% | 420 | 645 | 14:7_6_400 RO 4S- | 12.0 | 126.6 | ESPA4-LD | 383 | 1057.45 | 334 | 1.2 | 46.9 | 15.0 | 134.2 | 399.4 | 126.3 |
| Weighted average | | | | | | | | | | | | | | | | | 148.1 | 390.7 | 135.3 |

**RO 3S-, RO 3S+, RO 4S- & RO 4S+ refer to H2O Reverse Osmosis Standard skid; see GA drawing for more info*

# APPENDIX B –GENERAL ARRANGEMENT DRAWINGS – 3S RO AND 4S RO STANDARD SKIDS

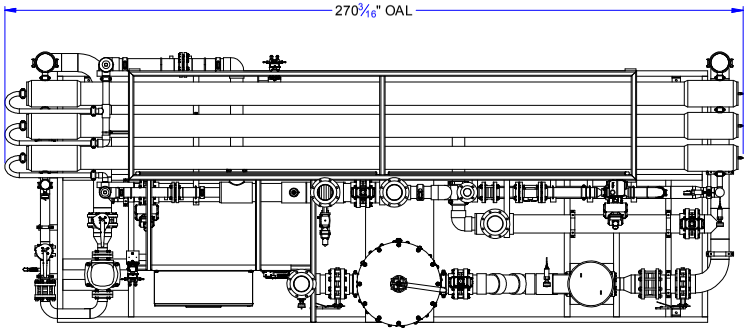


TOP VIEW

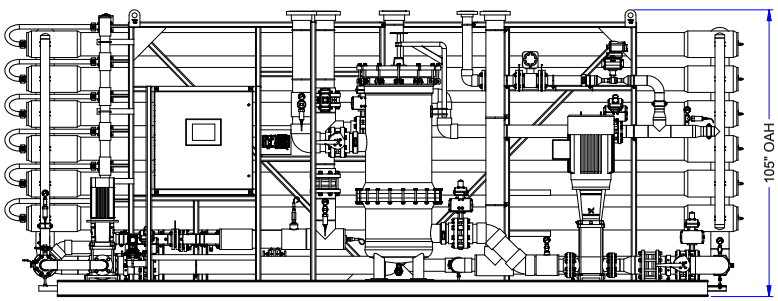


FRONT VIEW

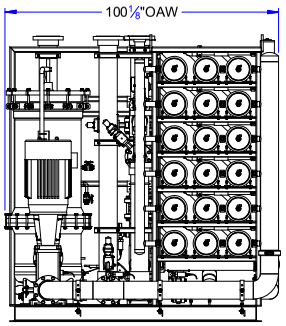


RIGHT VIEW

**NOTES**:

1. REFERENCE P&ID #D29397-C01-0400.
2. BOLTS AND NUTS ARE STAINLESS STEEL TYPE 316. WASHERS AND LOCK WASHERS ARE STAINLESS STEEL TYPE 316 PER ASTM F436 AND F844. MECHANICAL PROPERTIES PER CONDITION CW OF ASTM F593. DIMENSION PER ASME B18.2.1. THREADS PER ANSI B1.1 CLASS 2A.
3. STRUCTURAL STEEL WELDING AS PER CODE OF STANDARD PRACTICE, AWS D1.1.
4. NO VERTICAL DOWN WELDS ARE ALLOWED UNLESS CERTIFIED PER AWS D1.1 AND APPROVED BY $H_2O$ INNOVATION.
5. STITCH WELDS ARE NOT ALLOWED UNLESS APPROVED BY $H_2O$ INNOVATION.
6. HOLLOW STRUCTURAL STEEL SECTIONS PER ASTM A500, GRADE B.
7. STRUCTURAL CHANNEL, ANGLES, AND PLATE PER ASTM A36.
8. SAND BLAST FRAME TO SSPC-SP10 FINISH, ACCEPTABLE FOR POWDER COAT OR PAINTING.
9. PHOSPHATE CONVERSION COATING:
   APPLY 1.5 TO 2.5 MILS OF PRIMER, CARDINAL #E396 GR1372.
   APPLY 1.5 TO 3 MILS OF POWDER COAT, CARDINAL BLUE POLY #T009-BL01.
10. FINISHED FABRICATION OF STAINLESS STEEL SPOOLS MUST BE HYDROSTATICALLY TESTED TO 1.5 TIMES OPERATING PRESSURE. OPERATING PRESSURE SHALL BE XXX.
11. ALL PVC PIPE TO BE SCHEDULE 80, GRAY, U.N.O. PIPE MATERIAL TO CONFORM TO ASTM D1784. PHYSICAL DIMENSIONS, SCHEDULES, AND TOLERANCES TO CONFORM TO ASTM D1785.
12. ALL PVC FITTINGS TO BE SCHEDULE 80, GRAY. SOCKET FITTINGS TO CONFORM TO ASTM D2467.
13. PVC FLANGES 3" AND LARGER TO BE VAN STONE STYLE WITH GLASS FILLED PVC RING, U.N.O. PVC FLANGES 2-½" AND SMALLER TO BE VAN STONE STYLE WITH PVC RING, UNO PVC FLANGES TO MEET CLASS 150 BOLT HOLE PATTERN PER ANSI B16.5.
14. PVC PRIMER TO CONFORM TO ASTM F656. PVC SOLVENT CEMENT TO CONFORM TO ASTM D2564.
15. ALL GASKETS TO CONFORM TO ASTM F477.
16. FINISHED FABRICATION OF PVC/CPVC SPOOLS MUST BE HYDROSTATICALLY TESTED TO 50 PSI.
17. UNWITNESSED TEST REPORT MUST BE PROVIDED.
18. MATERIAL TEST REPORTS (MTR) TO BE PROVIDED FOR ALL MATERIAL.
19. TUBING FOR INSTRUMENTATION WILL BE NYLON.
20. APPROXIMATE SHIPPING WEIGHT: 9,840 LBS.

| TOTAL QUANTITY REQUIRED FOR THE PROJECT: | 1 |
|---|---|

**NOTE:**
THE INFORMATION, SPECIFICATIONS AND DATA SHOWN ON THIS PRINT ARE FURNISHED BY AND ARE TO REMAIN THE PROPERTY OF $H_2O$ INNOVATION.

THE PURPOSE OF THIS DOCUMENT IS TO FACILITATE THE INSTALLATION, MAINTENANCE AND OPERATION OF THE EQUIPMENT REPRESENTED BY SAID PRINT. NO OTHER USE OF THIS DOCUMENT SHALL BE MADE WITHOUT EXPRESS WRITTEN CONSENT FROM $H_2O$ INNOVATION.

DRAWING REVISION

| REV | DATE (DD-MM-YYYY) | REVISION DESCRIPTION | DRAWN | PEER | ENG | APPVD |
|---|---|---|---|---|---|---|
| 00 | 22/08/2016 | INITIAL RELEASE | DM | - | MB | MB |

h2o innovation — knowledge to share, du savoir à partager

UNLESS NOTED OTHERWISE
INTERPRETATION: ANSI Y14.5
TOLERANCES
FRACTIONS ±1/64"
DECIMALS 3 PLACES ±0.030
DECIMALS 4 PLACES ±0.010
ANGLES ±0.5°
HOLE SIZES +1/64" -0"
HOLE CENTERS ±1/64"
DO NOT SCALE PRINTS

H2O INNOVATION STANDARDS

STANDARD PACKAGED SYSTEM

TITLE: PACKAGED RO SYSTEM - 3S
2 STAGE FIRST PASS RO UNITS
GENERAL ARRANGEMENTS

| SCALE: | DRAWING NUMBER: | REVISION |
|---|---|---|
| N/A | D29397-3S-B01-0400 SHEET: 1 OF 3 | 00 |

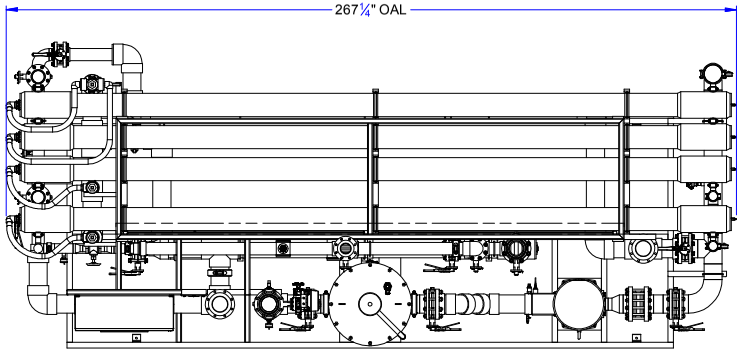


TOP VIEW

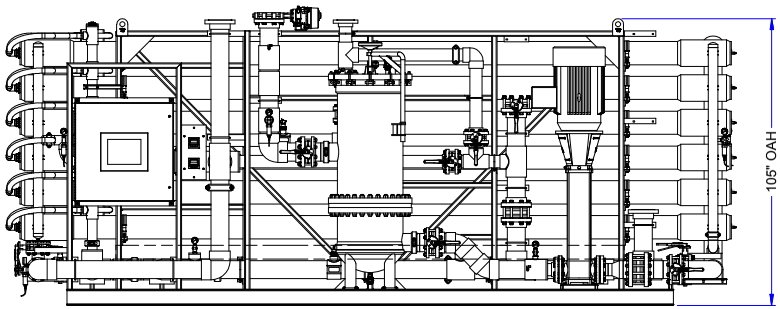


FRONT VIEW

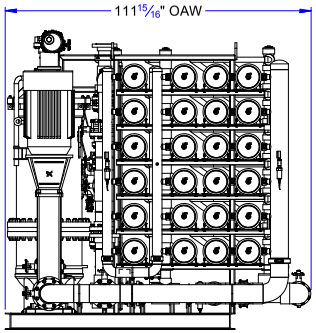


RIGHT VIEW

**NOTES**:

1. REFERENCE P&ID #D29397-C01-0400.
2. BOLTS AND NUTS ARE STAINLESS STEEL TYPE 316. WASHERS AND LOCK WASHERS ARE STAINLESS STEEL TYPE 316 PER ASTM F436 AND F844. MECHANICAL PROPERTIES PER CONDITION CW OF ASTM F593. DIMENSION PER ASME B18.2.1. THREADS PER ANSI B1.1 CLASS 2A.
3. STRUCTURAL STEEL WELDING AS PER CODE OF STANDARD PRACTICE, AWS D1.1.
4. NO VERTICAL DOWN WELDS ARE ALLOWED UNLESS CERTIFIED PER AWS D1.1 AND APPROVED BY $H_2O$ INNOVATION.
5. STITCH WELDS ARE NOT ALLOWED UNLESS APPROVED BY $H_2O$ INNOVATION.
6. HOLLOW STRUCTURAL STEEL SECTIONS PER ASTM A500, GRADE B.
7. STRUCTURAL CHANNEL, ANGLES, AND PLATE PER ASTM A36.
8. SAND BLAST FRAME TO SSPC-SP10 FINISH, ACCEPTABLE FOR POWDER COAT OR PAINTING.
9. PHOSPHATE CONVERSION COATING:
   APPLY 1.5 TO 2.5 MILS OF PRIMER, CARDINAL #E396 GR1372.
   APPLY 1.5 TO 3 MILS OF POWDER COAT, CARDINAL BLUE POLY #T009-BL01.
10. FINISHED FABRICATION OF STAINLESS STEEL SPOOLS MUST BE HYDROSTATICALLY TESTED TO 1.5 TIMES OPERATING PRESSURE. OPERATING PRESSURE SHALL BE XXX.
11. ALL PVC PIPE TO BE SCHEDULE 80, GRAY, U.N.O. PIPE MATERIAL TO CONFORM TO ASTM D1784. PHYSICAL DIMENSIONS, SCHEDULES, AND TOLERANCES TO CONFORM TO ASTM D1785.
12. ALL PVC FITTINGS TO BE SCHEDULE 80, GRAY. SOCKET FITTINGS TO CONFORM TO ASTM D2467.
13. PVC FLANGES 3" AND LARGER TO BE VAN STONE STYLE WITH GLASS FILLED PVC RING, U.N.O. PVC FLANGES 2-½" AND SMALLER TO BE VAN STONE STYLE WITH PVC RING, UNO PVC FLANGES TO MEET CLASS 150 BOLT HOLE PATTERN PER ANSI B16.5.
14. PVC PRIMER TO CONFORM TO ASTM F656. PVC SOLVENT CEMENT TO CONFORM TO ASTM D2564.
15. ALL GASKETS TO CONFORM TO ASTM F477.
16. FINISHED FABRICATION OF PVC/CPVC SPOOLS MUST BE HYDROSTATICALLY TESTED TO 50 PSI.
17. UNWITNESSED TEST REPORT MUST BE PROVIDED.
18. MATERIAL TEST REPORTS (MTR) TO BE PROVIDED FOR ALL MATERIAL.
19. TUBING FOR INSTRUMENTATION WILL BE NYLON.
20. APPROXIMATE SHIPPING WEIGHT: 10,414 LBS.

| TOTAL QUANTITY REQUIRED FOR THE PROJECT: | 1 |
|---|---|

**NOTE**:
THE INFORMATION, SPECIFICATIONS AND DATA SHOWN ON THIS PRINT ARE FURNISHED BY AND ARE TO REMAIN THE PROPERTY OF $H_2O$ INNOVATION.

THE PURPOSE OF THIS DOCUMENT IS TO FACILITATE THE INSTALLATION, MAINTENANCE AND OPERATION OF THE EQUIPMENT REPRESENTED BY SAID PRINT. NO OTHER USE OF THIS DOCUMENT SHALL BE MADE WITHOUT EXPRESS WRITTEN CONSENT FROM $H_2O$ INNOVATION.

DRAWING REVISION

| REV | DATE (DD-MM-YYYY) | REVISION DESCRIPTION | DRAWN | PEER | ENG | APPVD |
|---|---|---|---|---|---|---|
| 00 | 22/08/2016 | INITIAL RELEASE | DM | - | MB | MB |

h2o innovation
knowledge to share, du savoir à partager

UNLESS NOTED OTHERWISE
INTERPRETATION: ANSI Y14.5
TOLERANCES
FRACTIONS ±1/64"
DECIMALS 3 X ±0.030
0.XX ±0.010
ANGLES ±0.5°
HOLE SIZE (IN) +1/64" -0"
HOLE CENTERS ±1/64"
DO NOT SCALE PRINTS

H2O INNOVATION STANDARDS

STANDARD PACKAGED SYSTEM

TITLE: PACKAGED RO SYSTEM - 4S
2 STAGE FIRST PASS RO UNITS
GENERAL ARRANGEMENT

| SCALE: | DRAWING NUMBER: | REVISION |
|---|---|---|
| N/A | D29397-4S-B01-0400 SHEET: 1 OF 3 | 00 |

# APPENDIX C

# RO Floor Plans

BAR IS ONE INCH ON OFFICIAL DRAWINGS. 0 1" IF NOT ONE INCH, ADJUST SCALE ACCORDINGLY.

## WELL 1 PRODUCTION RATES:

| CURRENT PROCESSING RATE | PROCESSING RATE BEFORE IX INSTALLED |
|---|---|
| 830 GPM | 900 GPM |

BLENDED FINISHED FLOW RATE @ 75% RECOVERED APPROX. 750 GPM

## NOTES:

1. NEW OVERHEAD DOOR TO BE INSTALLED AT WALL BLOCK-OUT
2. BULK TANK FOR CAUSTIC SODA STORAGE
3. SCALE & DAY TANK FOR CAUSTIC SODA FEED
4. ANTISCALANT FEED SYSTEM - NOT SHOWN

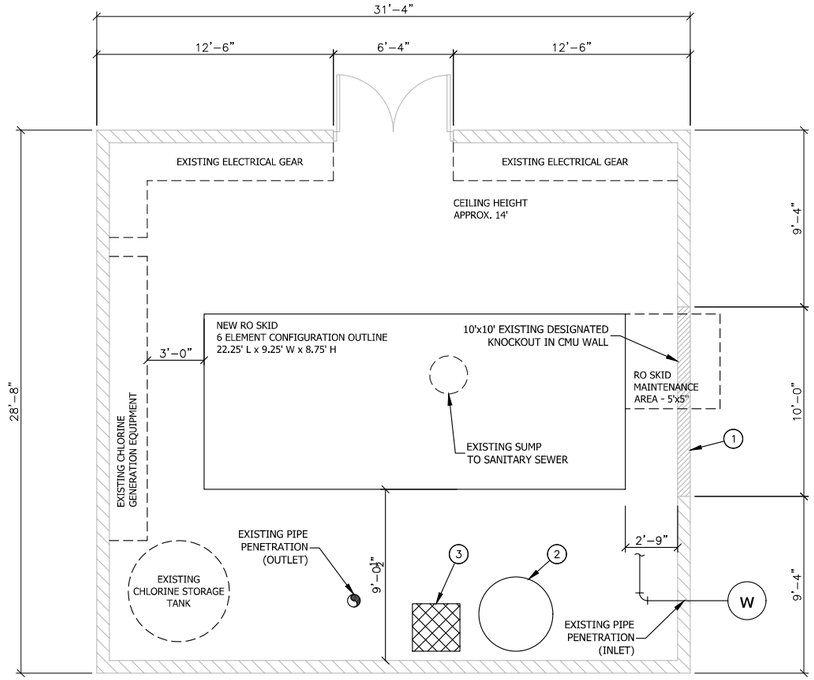


## 6 ELEMENT OPTION 1.0

SCALE: 1/4"=1'-0"

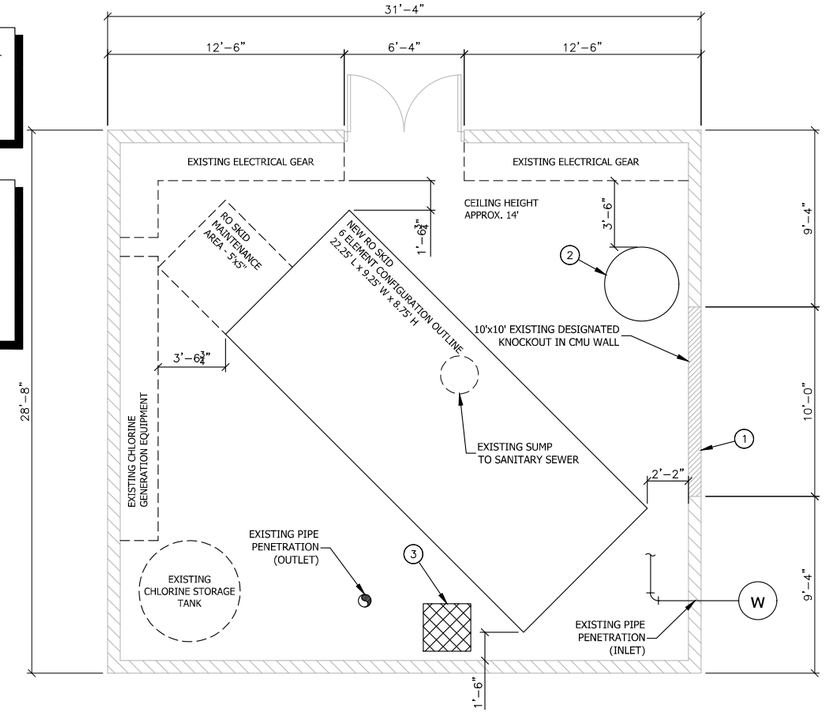


## 6 ELEMENT OPTION 2.0

SCALE: 1/4"=1'-0"

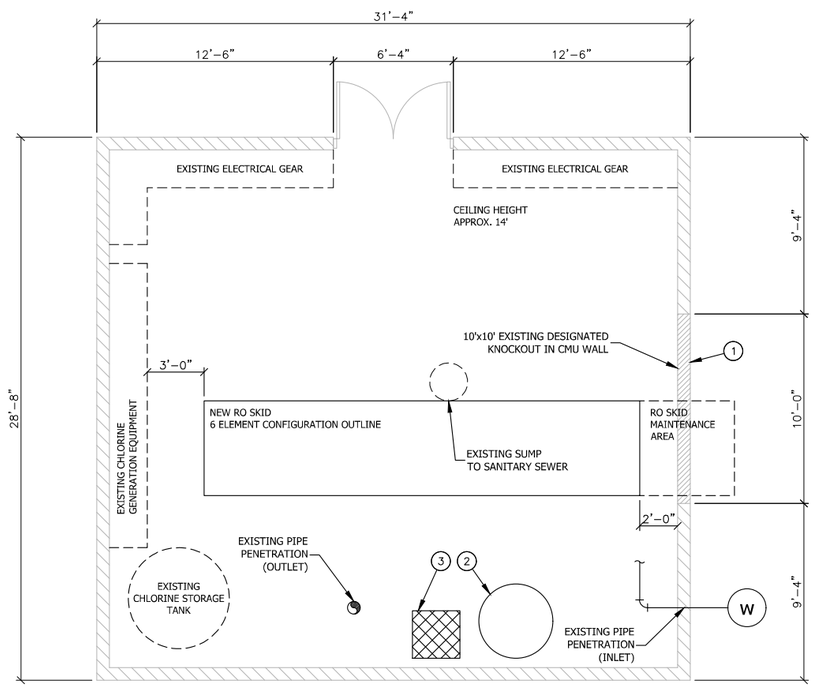


## 6 ELEMENT OPTION 3.0

SCALE: 1/4"=1'-0"

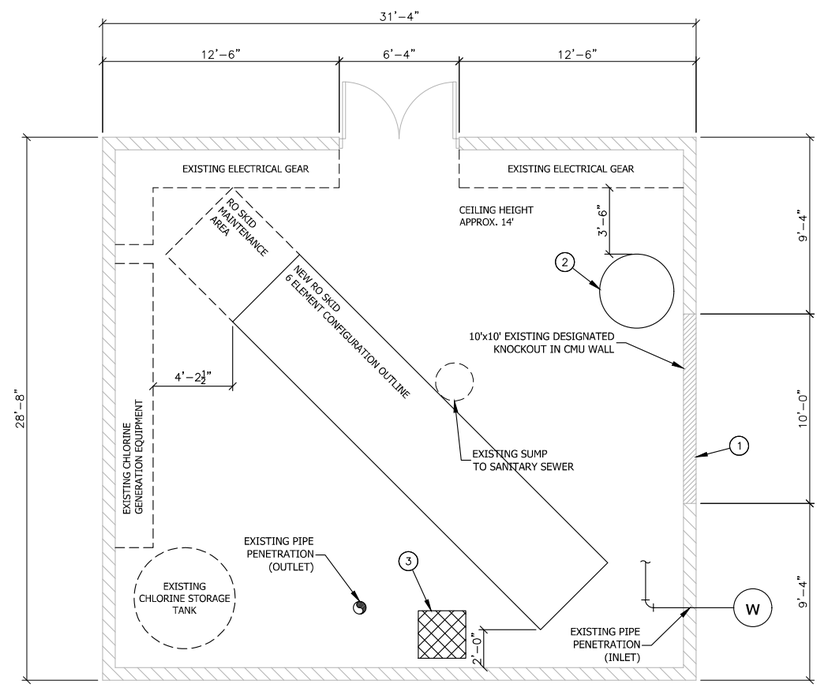


## 6 ELEMENT OPTION 4.0

SCALE: 1/4"=1'-0"

| # | DATE | DESCRIPTION | BY |
|---|---|---|---|


Bartlett & West
5900 S WESTERN AVE. SUITE 101 - SIOUX FALLS, SD 57108
PHONE 888.200.6464 - 605.274.7415
CERTIFICATE OF AUTHORITY NO. 000167
www.bartlettwest.com


# WELL 1 (HOWERTON) OVERALL PROCESS PLAN

EUREKA WELL IMPROVEMENTS
RO TREATMENT EVALUATION
CITY OF EUREKA, MO

PRELIMINARY

| | |
|---|---|
| DESIGNED BY: | DLZ |
| DRAWN BY: | DLZ |
| APPROVED BY: | BLH |
| DESIGN PROJ: | 19500.002 |
| CONST PROJ: | --- |
| SCALE: | AS NOTED |
| DATE: | --- |
| DRAWING NO: | D1.11 |
| SHEET NO: | 1 of 6 |


ALL RIGHTS RESERVED. ALL BARTLETT & WEST PLANS, SPECIFICATIONS AND DRAWINGS ARE PROTECTED UNDER COPYRIGHT LAW, AND NO PART MAY BE COPIED, REPRODUCED, DISPLAYED PUBLICLY, USED TO CREATE DERIVATIVES, DISTRIBUTED, STORED IN A RETRIEVAL SYSTEM OR TRANSMITTED IN ANY FORM BY ANY MEANS WITHOUT PRIOR WRITTEN PERMISSION OF BARTLETT & WEST.



Last edit on: 11/2/2018 3:11 PM by: DJH01125 Drawing Name: w:\Proj\19500\19500\19500.002\AutoCad\Plan Sets\19500.002_D_Well 1 Floor Plan.dwg Layout Name: Well 1 Floor Plan Plotted By: DJH01125 Plotted on: 11/2/2018 3:38:15 PM

BAR IS ONE INCH ON OFFICIAL DRAWINGS. 0 1" IF NOT ONE INCH, ADJUST SCALE ACCORDINGLY.

## WELL 5 PRODUCTION RATES:

| CURRENT PROCESSING RATE | PROCESSING RATE BEFORE IX INSTALLED |
|---|---|
| 860 GPM | 1,060 GPM |

BLENDED FINISHED FLOW RATE @ 75% RECOVERED APPROX. 850 GPM

## NOTES:

1. NEW OVERHEAD DOOR TO BE INSTALLED AT WALL BLOCK-OUT
2. BULK TANK FOR CAUSTIC SODA STORAGE
3. SCALE & DAY TANK FOR CAUSTIC SODA FEED
4. ANTISCALANT FEED SYSTEM - NOT SHOWN

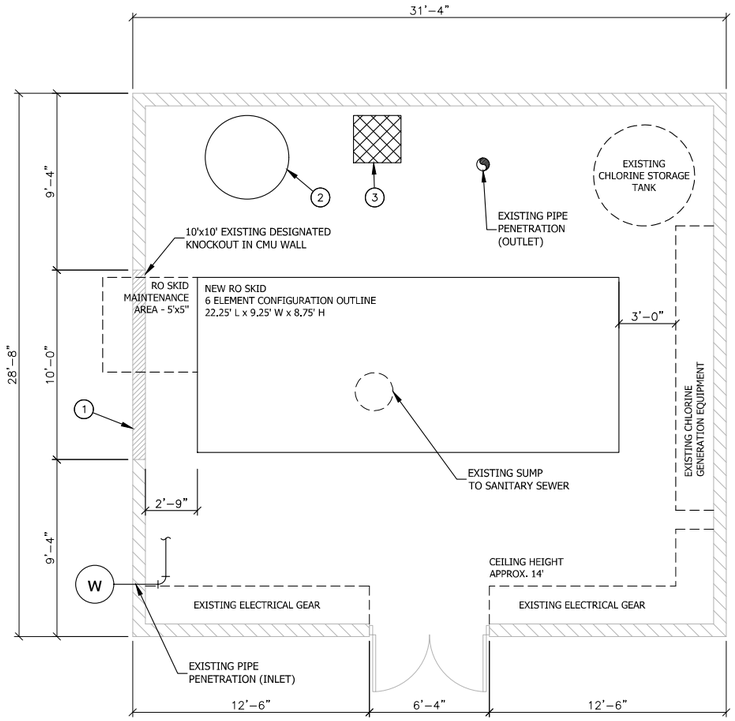


6 ELEMENT OPTION 1.0
SCALE: 1/4"=1'-0"

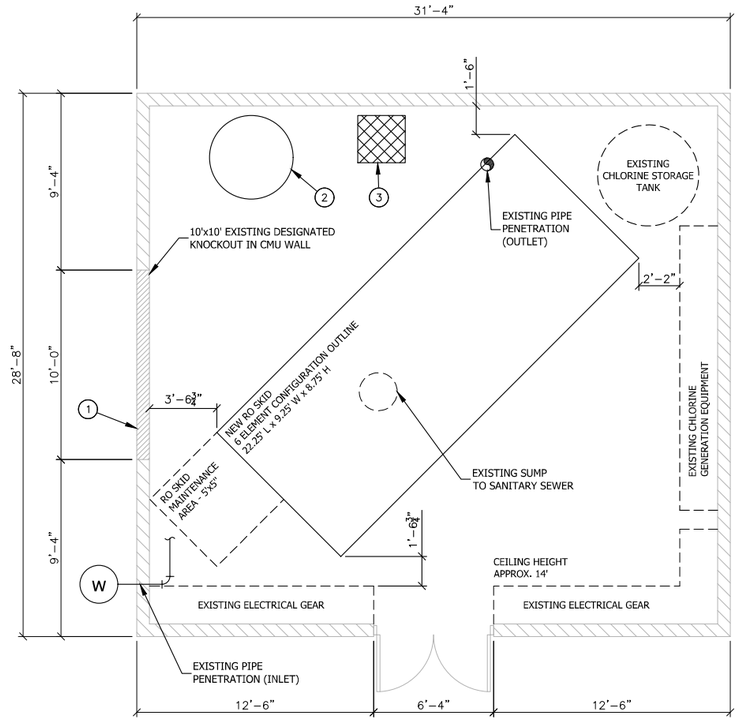


6 ELEMENT OPTION 2.0
SCALE: 1/4"=1'-0"

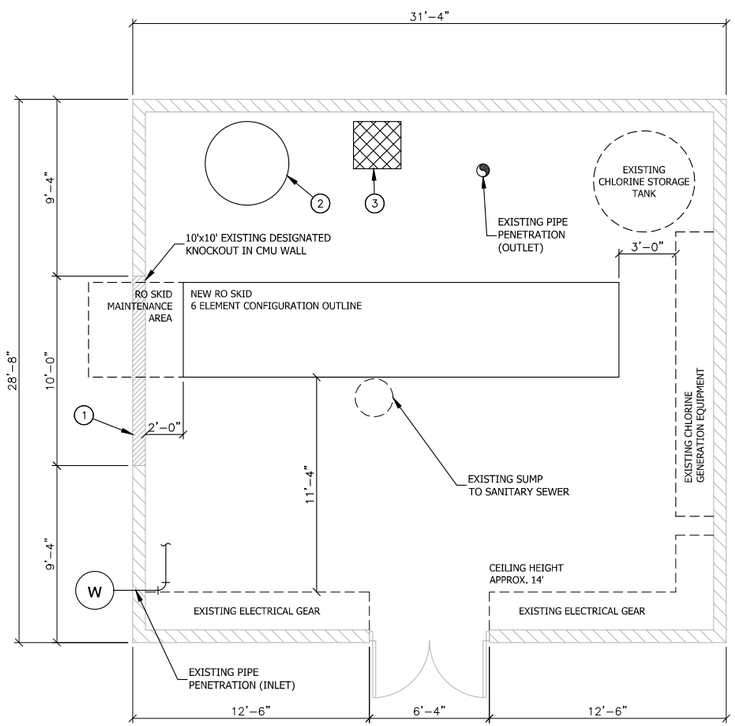


6 ELEMENT OPTION 3.0
SCALE: 1/4"=1'-0"

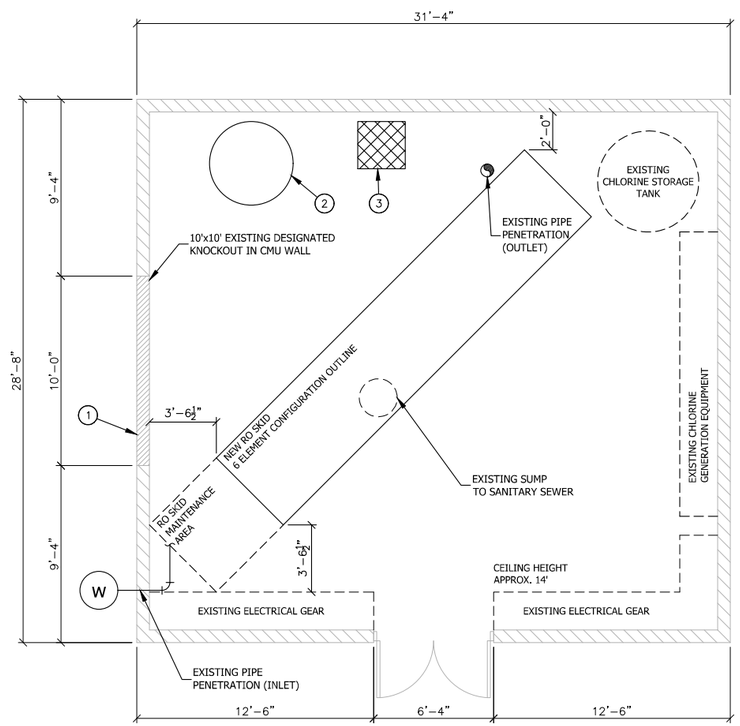


6 ELEMENT OPTION 4.0
SCALE: 1/4"=1'-0"

| # | DATE | DESCRIPTION | BY |
|---|---|---|---|


Bartlett & West
5900 S WESTERN AVE. SUITE 101 - SIOUX FALLS, SD 57108
PHONE 888.200.6464 - 605.274.7415
CERTIFICATE OF AUTHORITY NO. 000167
www.bartlettwest.com


# WELL 5 (DREWEL) OVERALL PROCESS PLAN

EUREKA WELL IMPROVEMENTS
RO TREATMENT EVALUATION
CITY OF EUREKA, MO

PRELIMINARY

| | |
|---|---|
| DESIGNED BY: | DLZ |
| DRAWN BY: | DLZ |
| APPROVED BY: | BLH |
| DESIGN PROJ: | 19500.002 |
| CONST PROJ: | --- |
| SCALE: | AS NOTED |
| DATE: | --- |
| DRAWING NO: | D5.11 |
| SHEET NO: | 2 of 6 |


ALL RIGHTS RESERVED. ALL BARTLETT & WEST PLANS, SPECIFICATIONS AND DRAWINGS ARE PROTECTED UNDER COPYRIGHT LAW, AND NO PART MAY BE COPIED, REPRODUCED, DISPLAYED PUBLICLY, USED TO CREATE DERIVATIVES, DISTRIBUTED, STORED IN A RETRIEVAL SYSTEM OR TRANSMITTED IN ANY FORM BY ANY MEANS WITHOUT PRIOR WRITTEN PERMISSION OF BARTLETT & WEST.



Last edit on: 11/2/2018 3:24 PM by: DJH01125 Drawing Name: w:\Proj\19500\19500\19500.002\AutoCad\Plan Set\19500.002_D_Well 5 Floor Plan.dwg Layout Name: Well 5 Floor Plan Plotted By: DJH01125 Plotted on: 11/2/2018 3:38:27 PM

BAR IS ONE INCH ON OFFICIAL DRAWINGS. 0 1" IF NOT ONE INCH, ADJUST SCALE ACCORDINGLY.

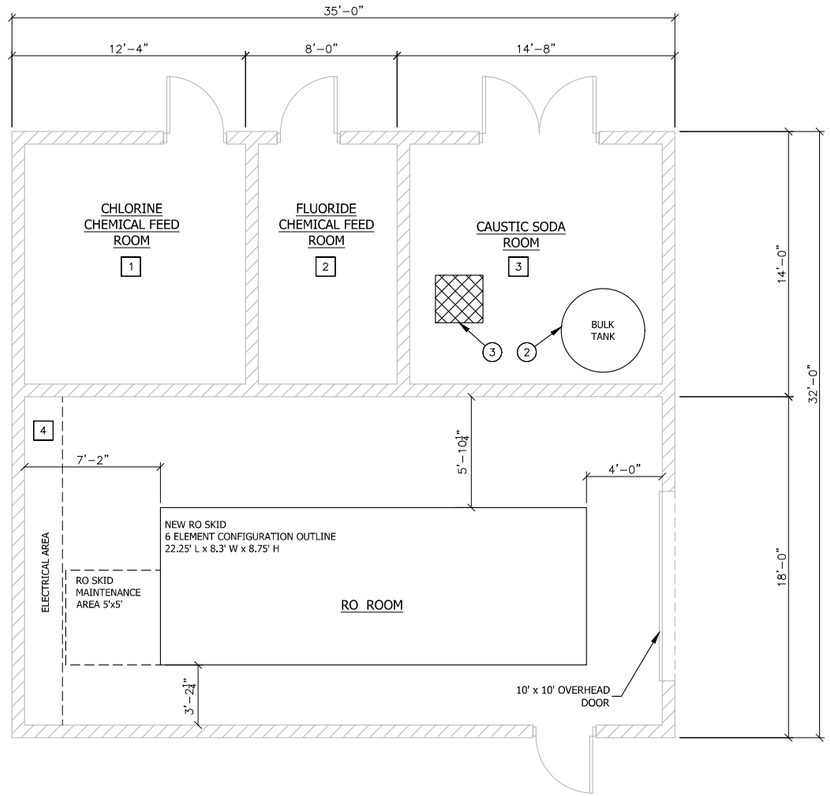


WELL NEW TREATMENT BULDING
SCALE: 1/4"=1'-0"

## WELL 6 PRODUCTION RATES:

| CURRENT PROCESSING RATE | PROCESSING RATE BEFORE IX INSTALLED |
|---|---|
| 460 GPM | 600 GPM |

BLENDED FINISHED FLOW RATE @ 75% RECOVERED APPROX. 500 GPM

## NOTES:

1. NOT APPLICABLE - THIS SHEET
2. BULK TANK FOR CAUSTIC SODA STORAGE
3. SCALE & DAY TANK FOR CAUSTIC SODA FEED
4. ANTISCALANT FEED SYSTEM - NOT SHOWN

1. EXISTING CHLORINE FEED EQUIPMENT TO BE RELOCATED
2. EXISTING FLUORIDE FEED EQUIPMENT TO BE RELOCATED
3. NEW CAUSTIC SODA BULK TANK, SCALE DAY TANK AND FEED PUMP
4. ELECTRICAL AREA TO CONTAIN PANELS FOR THE FOLLOWING LARGE MOTORS:
   - MAIN DISCONNECT PANEL
   - WELL PUMP 125 HP (VFD)
   - RO FEED PUMP 30 HP (VFD)
   - AERATOR MOTORS 1 @ 15 HP, PLUS 1 AT 2HP.
   - LIGHTS, HEAT, MISC 125 V POWER

| # | DATE | DESCRIPTION | BY |
|---|---|---|---|


Bartlett&West
5900 S WESTERN AVE. SUITE 101 - SIOUX FALLS, SD 57108
PHONE 888.200.6464 - 605.274.7415
CERTIFICATE OF AUTHORITY NO. 000167
www.bartlettwest.com


# WELL 6 (LEGENDS)
# NEW TREATMENT BUILDING
# OVERALL PROCESS PLAN

EUREKA WELL IMPROVEMENTS
RO TREATMENT EVALUATION
CITY OF EUREKA, MO

PRELIMINARY

| | |
|---|---|
| DESIGNED BY: | DJH |
| DRAWN BY: | --- |
| APPROVED BY: | BLH |
| DESIGN PROJ: | 19500.002 |
| CONST PROJ: | --- |
| SCALE: | AS NOTED |
| DATE: | --- |
| DRAWING NO: | D6.12 |
| SHEET NO: | 3 of 6 |


ALL RIGHTS RESERVED. ALL BARTLETT & WEST PLANS, SPECIFICATIONS AND DRAWINGS ARE PROTECTED UNDER COPYRIGHT LAW, AND NO PART MAY BE COPIED, REPRODUCED, DISPLAYED PUBLICLY, USED TO CREATE DERIVATIVES, DISTRIBUTED, STORED IN A RETRIEVAL SYSTEM OR TRANSMITTED IN ANY FORM BY ANY MEANS WITHOUT PRIOR WRITTEN PERMISSION OF BARTLETT & WEST.



Last edit on: 11/2/2018 3:28 PM by: DJH01125 Drawing Name: w:\Proj\19500\19500\19500.002\AutoCad\Plan Set\19500.002_D_Well 6 Floor Plan.dwg Layout Name: Chem Feed & RO Room Plotted By: DJH01125 Plotted on: 11/2/2018 3:28:34 PM

BAR IS ONE INCH ON OFFICIAL DRAWINGS. 0 1" IF NOT ONE INCH, ADJUST SCALE ACCORDINGLY.

## WELL 8 PRODUCTION RATES:

| CURRENT PROCESSING RATE | PROCESSING RATE BEFORE IX INSTALLED |
|---|---|
| 680 GPM | 680 GPM |

BLENDED FINISHED FLOW RATE @ 75% RECOVERED APPROX. 550 GPM

## NOTES:

1. NEW OVERHEAD DOOR TO BE INSTALLED AT WALL BLOCK-OUT
2. BULK TANK FOR CAUSTIC SODA STORAGE
3. SCALE & DAY TANK FOR CAUSTIC SODA FEED
4. ANTISCALANT FEED SYSTEM - NOT SHOWN

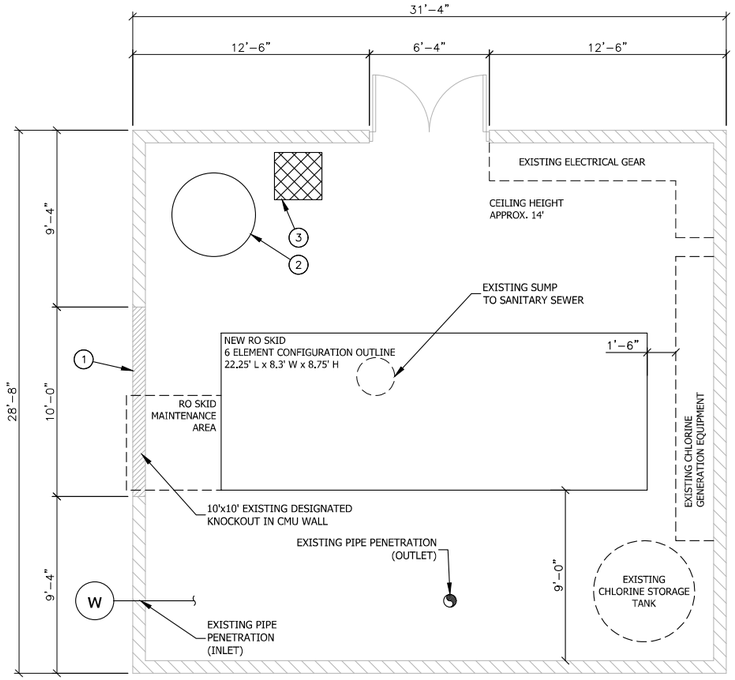


6 ELEMENT OPTION 1.0
SCALE: 1/4"=1'-0"

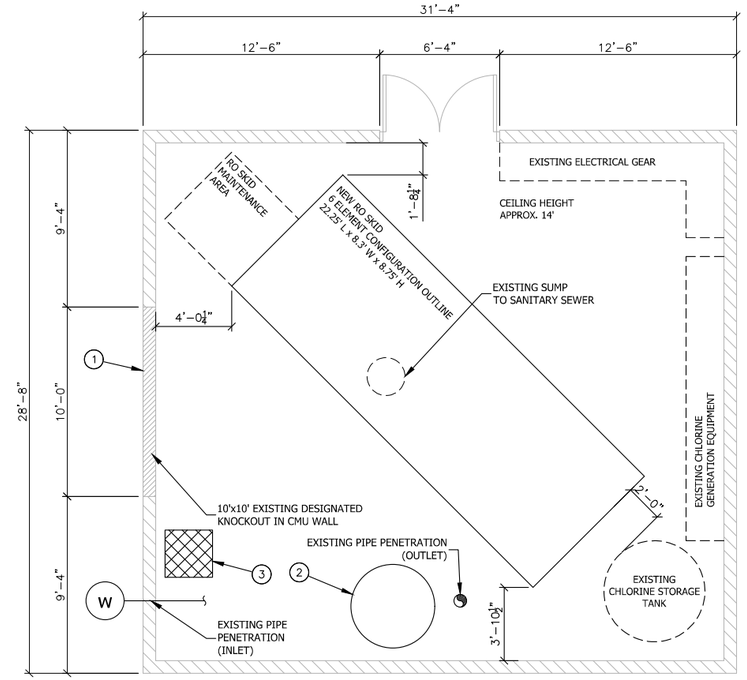


6 ELEMENT OPTION 2.0
SCALE: 1/4"=1'-0"

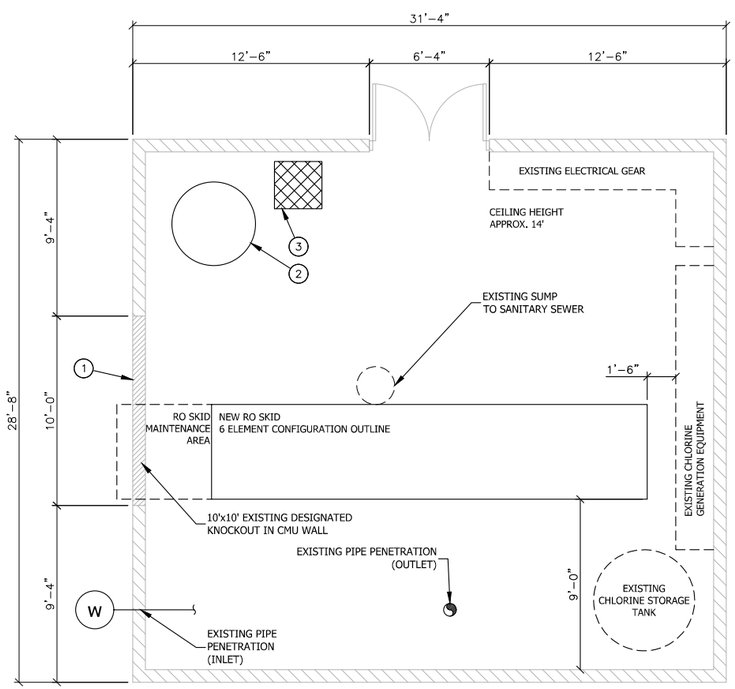


6 ELEMENT OPTION 3.0
SCALE: 1/4"=1'-0"

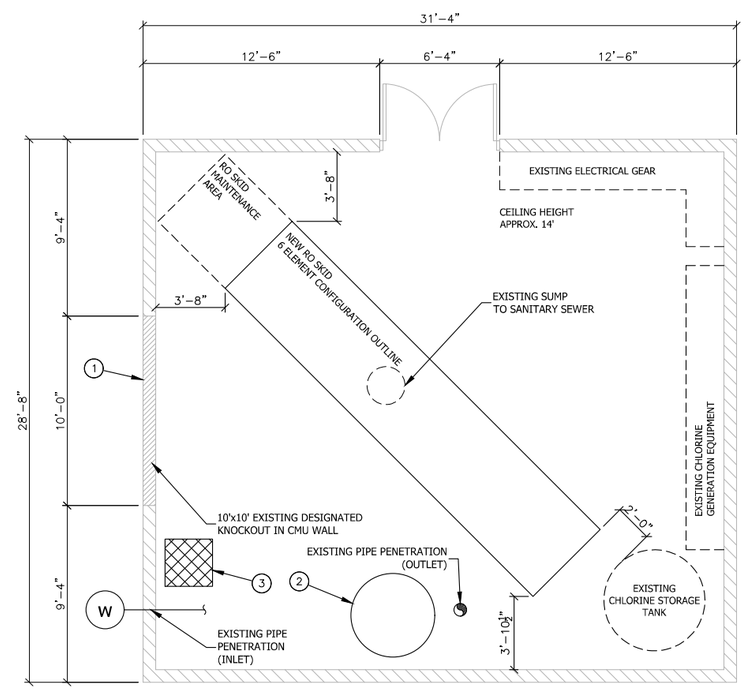


6 ELEMENT OPTION 4.0
SCALE: 1/4"=1'-0"

| # | DATE | DESCRIPTION | BY |
|---|---|---|---|


Bartlett & West
5900 S WESTERN AVE. SUITE 101 - SIOUX FALLS, SD 57108
PHONE 888.200.6464 - 605.274.7415
CERTIFICATE OF AUTHORITY NO. 000167
www.bartlettwest.com


# WELL 8 (VIOLA) OVERALL PROCESS PLAN

EUREKA WELL IMPROVEMENTS
RO TREATMENT EVALUATION
CITY OF EUREKA, MO

PRELIMINARY

| | |
|---|---|
| DESIGNED BY: | DLZ |
| DRAWN BY: | DLZ |
| APPROVED BY: | BLH |
| DESIGN PROJ: | 19500.002 |
| CONST PROJ: | --- |
| SCALE: | AS NOTED |
| DATE: | --- |
| DRAWING NO: | D8.11 |
| SHEET NO: | 4 of 6 |


ALL RIGHTS RESERVED. ALL BARTLETT & WEST PLANS, SPECIFICATIONS AND DRAWINGS ARE PROTECTED UNDER COPYRIGHT LAW, AND NO PART MAY BE COPIED, REPRODUCED, DISPLAYED PUBLICLY, USED TO CREATE DERIVATIVES, DISTRIBUTED, STORED IN A RETRIEVAL SYSTEM OR TRANSMITTED IN ANY FORM BY ANY MEANS WITHOUT PRIOR WRITTEN PERMISSION OF BARTLETT & WEST.



Last edit on: 11/2/2018 3:33 PM by: DJH01125 Drawing Name: w:\Proj\19500\19500\19500.002\AutoCad\Plan Sets\19500.002_Well 8 Floor Plan.dwg Layout Name: Well 8 Floor Plan Plotted By: DJH01125 Plotted on: 11/2/2018

BAR IS ONE INCH ON OFFICIAL DRAWINGS. 0 1" IF NOT ONE INCH, ADJUST SCALE ACCORDINGLY.

## WELL 10 PRODUCTION RATES:

| CURRENT PROCESSING RATE | PROCESSING RATE BEFORE IX INSTALLED |
|---|---|
| 480 GPM | 580 GPM |

BLENDED FINISHED FLOW RATE @ 75% RECOVERED APPROX. 470 GPM

## NOTES:

1. NOT APPLICABLE - THIS SHEET
2. BULK TANK FOR CAUSTIC SODA STORAGE
3. SCALE & DAY TANK FOR CAUSTIC SODA FEED
4. ANTISCALANT FEED SYSTEM - NOT SHOWN

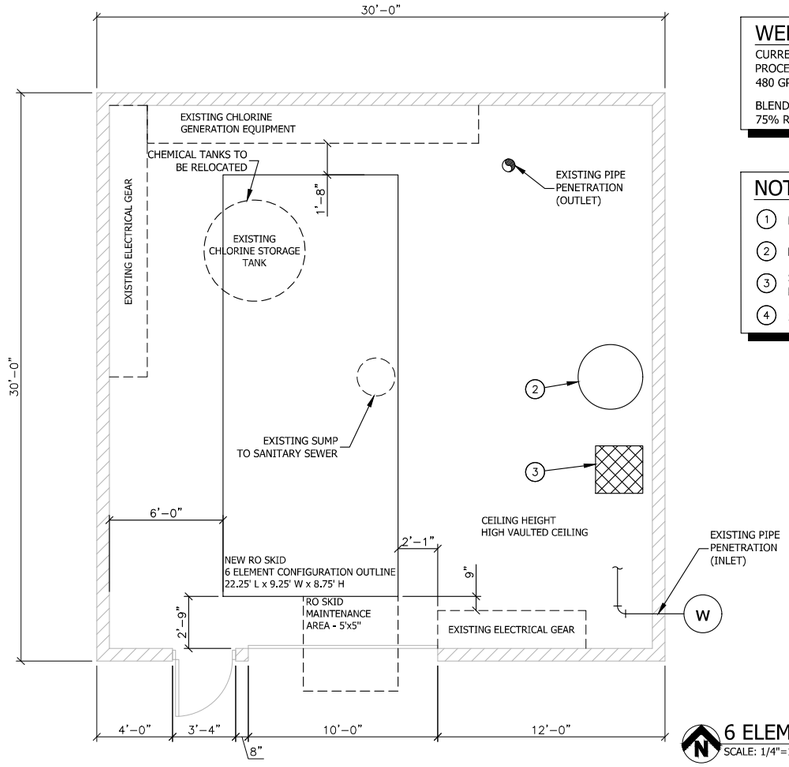


6 ELEMENT OPTION 1.0
SCALE: 1/4"=1'-0"

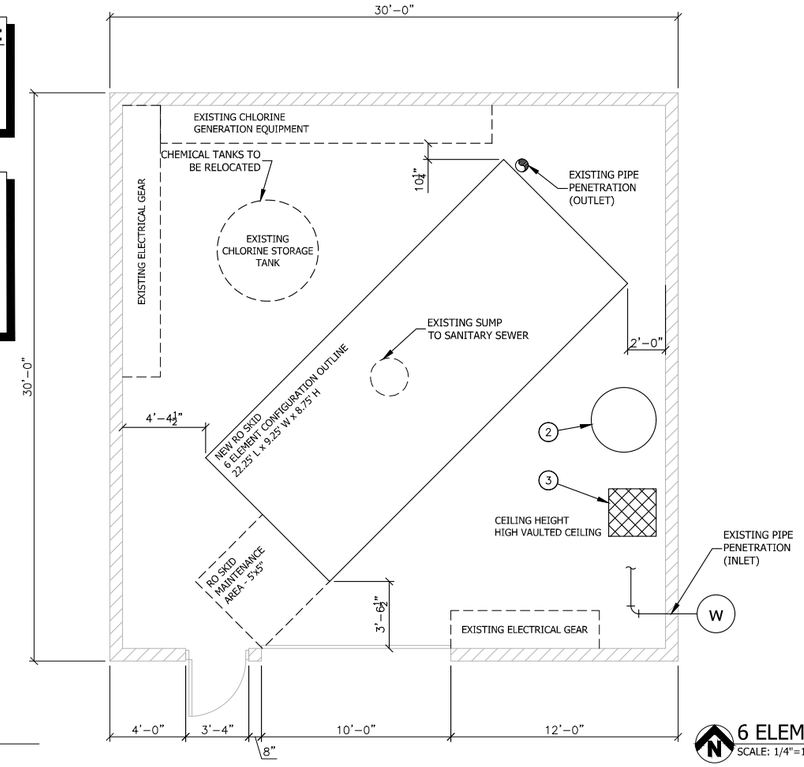


6 ELEMENT OPTION 2.0
SCALE: 1/4"=1'-0"

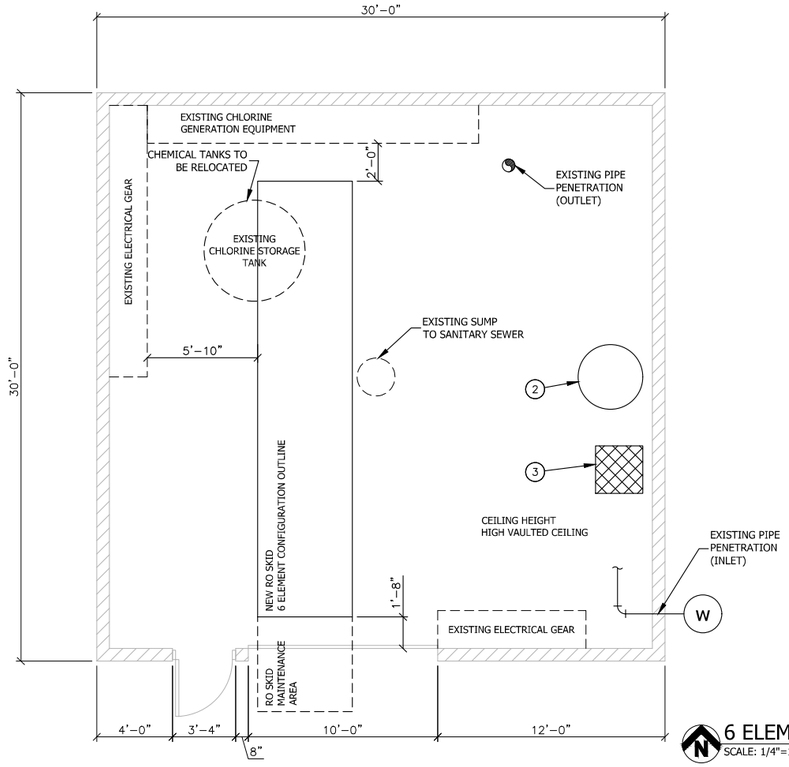


6 ELEMENT OPTION 3.0
SCALE: 1/4"=1'-0"

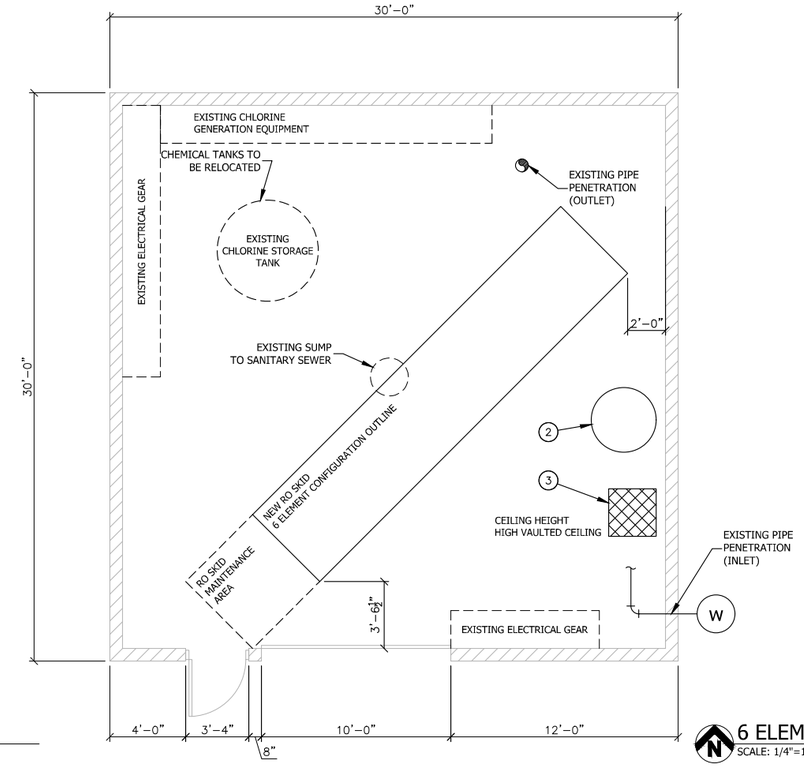


6 ELEMENT OPTION 4.0
SCALE: 1/4"=1'-0"

| # | DATE | DESCRIPTION | BY |
|---|---|---|---|


Bartlett & West
5900 S WESTERN AVE. SUITE 101 - SIOUX FALLS, SD 57108
PHONE 888.200.6464 - 605.274.7415
CERTIFICATE OF AUTHORITY NO. 000167
www.bartlettwest.com


# WELL 10 (ASHTON) OVERALL PROCESS PLAN

EUREKA WELL IMPROVEMENTS
RO TREATMENT EVALUATION
CITY OF EUREKA, MO

PRELIMINARY

| | |
|---|---|
| DESIGNED BY: | DLZ |
| DRAWN BY: | DLZ |
| APPROVED BY: | BLH |
| DESIGN PROJ: | 19500.002 |
| CONST PROJ: | --- |
| SCALE: | AS NOTED |
| DATE: | --- |
| DRAWING NO: | D10.11 |
| SHEET NO: | 5 of 6 |


ALL RIGHTS RESERVED. ALL BARTLETT & WEST PLANS, SPECIFICATIONS AND DRAWINGS ARE PROTECTED UNDER COPYRIGHT LAW, AND NO PART MAY BE COPIED, REPRODUCED, DISPLAYED PUBLICLY, USED TO CREATE DERIVATIVES, DISTRIBUTED, STORED IN A RETRIEVAL SYSTEM OR TRANSMITTED IN ANY FORM BY ANY MEANS WITHOUT PRIOR WRITTEN PERMISSION OF BARTLETT & WEST.



Last edit on: 11/2/2018 3:36 PM by: DJH01125 Drawing Name: w:\Proj\19500\19500\19500.002\AutoCad\Plan Set\19500.002_D_Well 10 Floor Plan.dwg Layout Name: Well 10 Floor Plan Plotted By: DJH01125 Plotted on: 11/2/2018 3:38:53 PM

© COPYRIGHT—ENGINEERED FLUID, INC.—2016

This drawing and all the information contained herein is the property of Engineered Fluid, Inc. and is to be retained in confidence, and, without the written permission of an officer of Engineered Fluid, Inc., is not to be duplicated, sent, shown or used for any other purpose than to disclose to the recipient a design concept, and this drawing is to be returned to Engineered Fluid, Inc., upon demand.

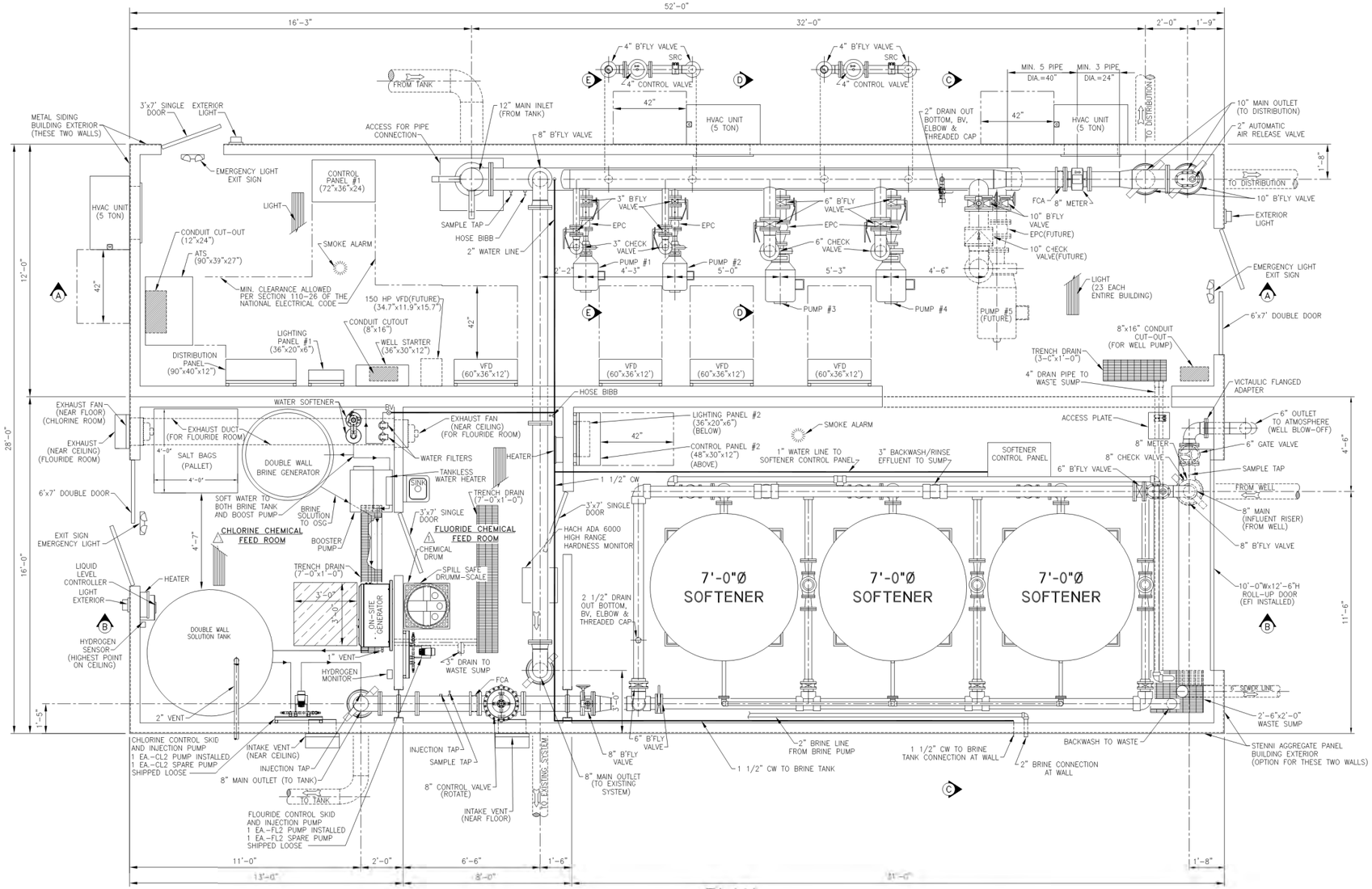


PLAN

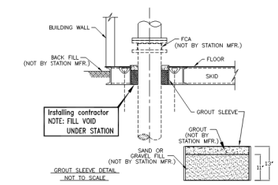


## TYPICAL GROUT DETAIL

⚠ THE FLOOR IN THE CHLORINE AND FLOURIDE ROOMS WILL BE SITE POURED CONCRETE, 4" THICK.

## DESIGN CRITERIA

Controls PLC

Power Service: 480 Volts, 3 Phase, 60 Cycle

### PUMP DATA

Type: HORIZ., CLOSED CPLD., END SUCTION

Pump 1 & 2
- Capacity: 140 G.P.M. AT 264 FEET T.D.H.
- Size: 1 1/2" X 2" X 9"
- Motor: 20 H.P., 3500 R.P.M.

Pump 3 & 4
- Capacity: 490 G.P.M. AT X 264 FEET T.D.H.
- Size: 2.5" X 3" X 9"
- Motor: 50 H.P., 3500 R.P.M.

Pump 5(FUTURE)
- Capacity: 1500 G.P.M. AT X 264 FEET T.D.H.
- Size: 5" X 8" X 16"
- Motor: 150 H.P., 1800 R.P.M.

NOTE: FCA – FLANGE COUPLING ADAPTER
EPC – ELASTOMER PIPE CONNECTOR
SRC – SELF RESTRAINED COUPLING

| REVISION # | DATE | REVISED BY | DESCRIPTION |
|---|---|---|---|
| 1 | 04/27/16 | SM | REVISED FLOOR DRAINS, ELECT. ROOM |
| 2 | 5/25/16 | SM | VFDS, SCALE/CONTAINMNT, HEADER DRAINS, 6" B-OFF, PUMPS |
| 3 | 7/22/16 | SM | DELETE ELECT RM WALL, EPC PUMP DISCH, METERS |
| 4 | 8/16/16 | DD | STATE PUMP & VFD #5 AS FUTURE 150 HP |

| | | | |
|---|---|---|---|
| DESIGNED BY: DD/GW | MECHANICAL CHECKED BY (C.E.): | ELECTRICAL CHECKED BY: | |
| DRAWN BY: SM | | | SCALE: 3/8" = 1'-0" |

ENGINEERED FLUID, INC.
P.O. DRAWER 723 • CENTRALIA, ILLINOIS 62801 • 618-533-1351

NORTH

STATE OF MISSOURI — GEORGE T. WOOTEN, JR. — NUMBER E-32613 — REGISTERED PROFESSIONAL ENGINEER — August 30, 2016

# WATER TREATMENT PLAN

ARBORS OF ROCKWOOD WATER TREATMENT PLANT

EUREKA, MO

JOB REF NO. 3064 | DRWG. NO. P-3064-B-001.4

This drawing is conceptual and does not reveal certain details and manufacturing processes required to successfully build the equipment. As such, Engineered Fluid, Inc. is not responsible for injury or damages caused by any unauthorized fabrication or assembly using all or any part of this drawing.

NOTE: "EXCEPT FOR PIPE END SUPPORTS, WHICH ARE SHOWN, VERTICAL AND ANGLE PIPE BRACES ARE NOT SHOWN FOR DRAWING CLARITY"

Included for Ease of Reference

# APPENDIX D

# Aerator Information

# GridBee® – THM / VOC Removal Systems

In-Tank / In-Clearwell Design

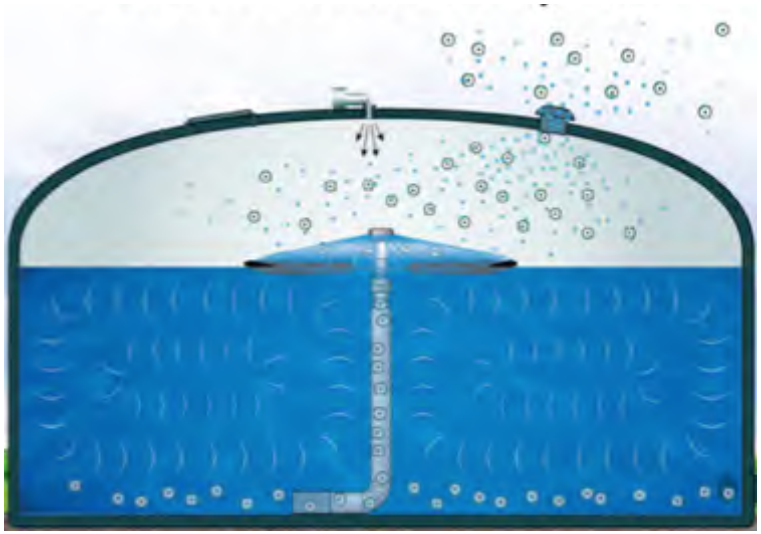

Skid-Mounted Design

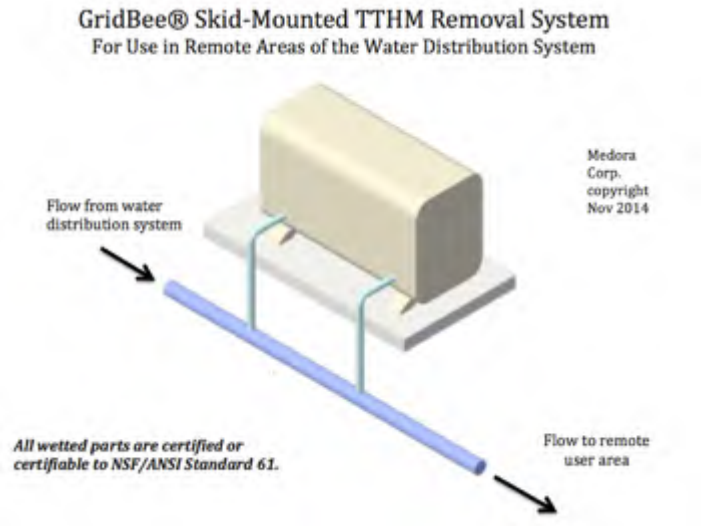


Medora Corporation
www.medoraco.com
866-437-8076
info@medoraco.com

GridBee® SolarBee®

# In-Tank / In-Clearwell Floating Spray Nozzle Design

THM / VOC Removal System

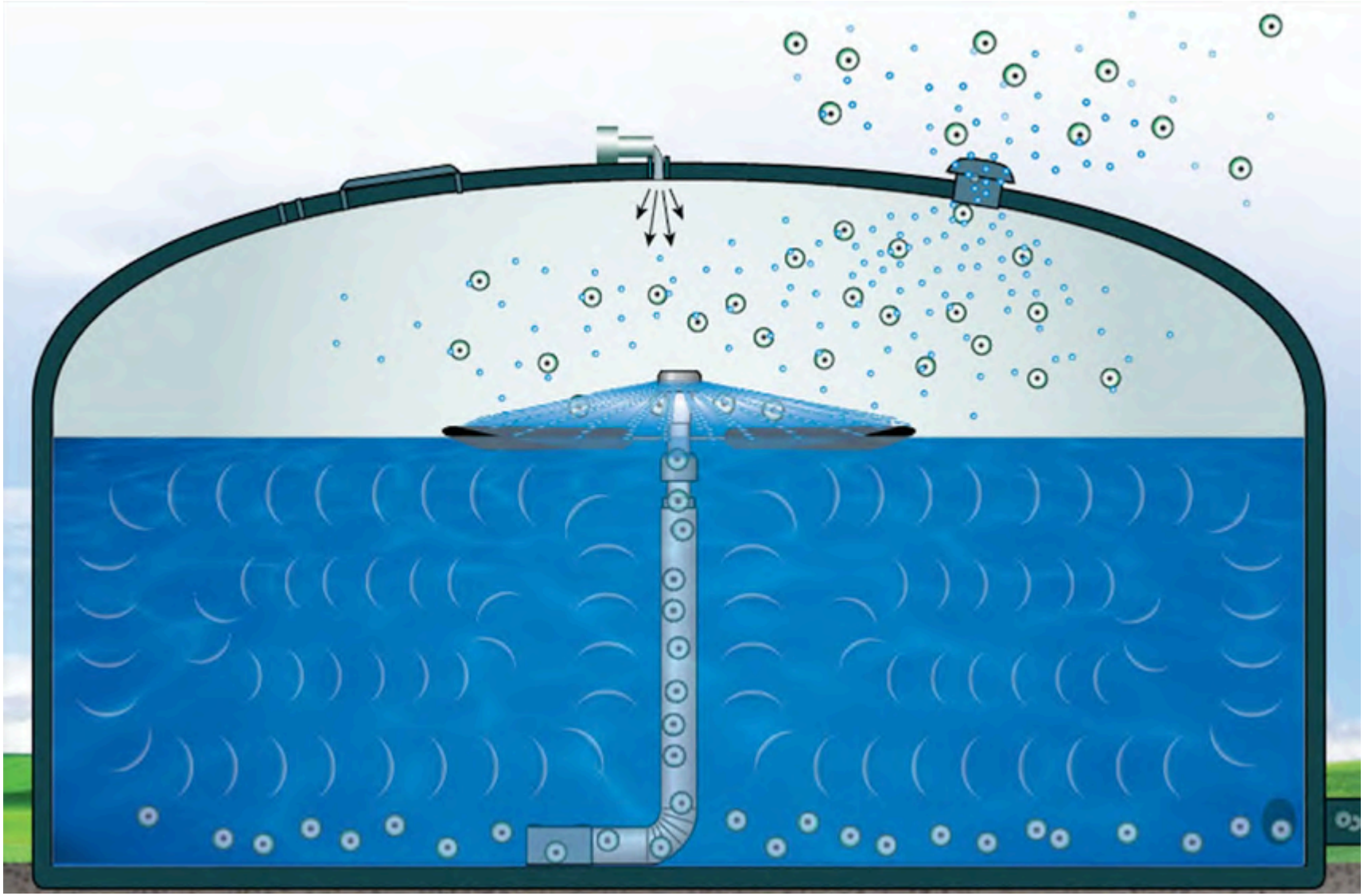

# Standard pre-manfuactured sizes

3, 5, 10 & 15 HP Floating Spray Nozzle machines

| Model SN3 | Model SN5 | Model SN10 | Model SN15 |
|---|---|---|---|
| 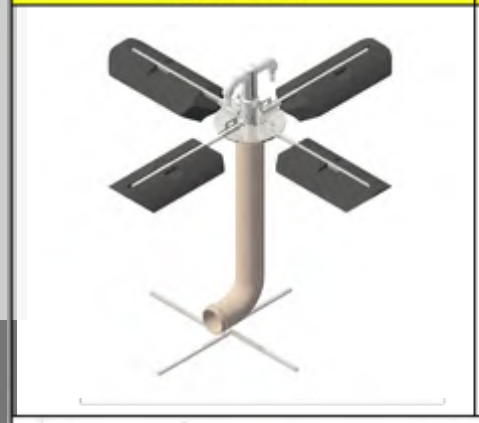 | | 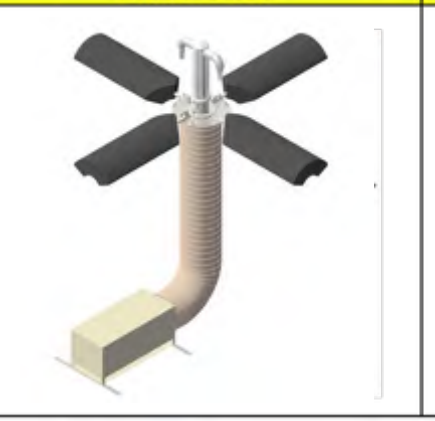 | 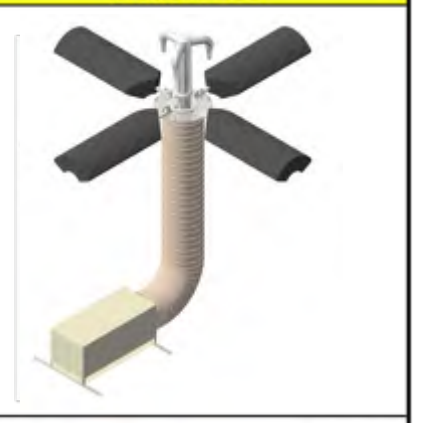 |
| **0.20 MGD** | **0.33 MGD** | **0.66 MGD** | **1.0 MGD** |

**System design is based on:** Tank size, shape, configuration, mean and peak water fill rates and daily flow-through rates, maximum and minimum THM / VOC levels, species, amount of reduction desired, off-peak needs, other. Often a mixer is included for supplemental blending of treated with untreated water, or ice protection of the tank in cold climates.

# SN1 SMALL TANK THM & VOC REMOVAL SYSTEM

**SN1 Systems Self-Installed start less than $20,000!**

**For Small Potable Storage Tanks & Reservoirs**

*Now there's an effective & affordable solution for active trihalomethane removal in small tanks!*

The SN1 is a natural progression of Medora's industry leading THM & VOC removal spray aeration offering. Specifically built with small tanks in mind, now even the smallest of drinking water distribution systems can achieve reliable and economical THM removal.

# In-Tank – THM / VOC Removal System - in a GST Tank

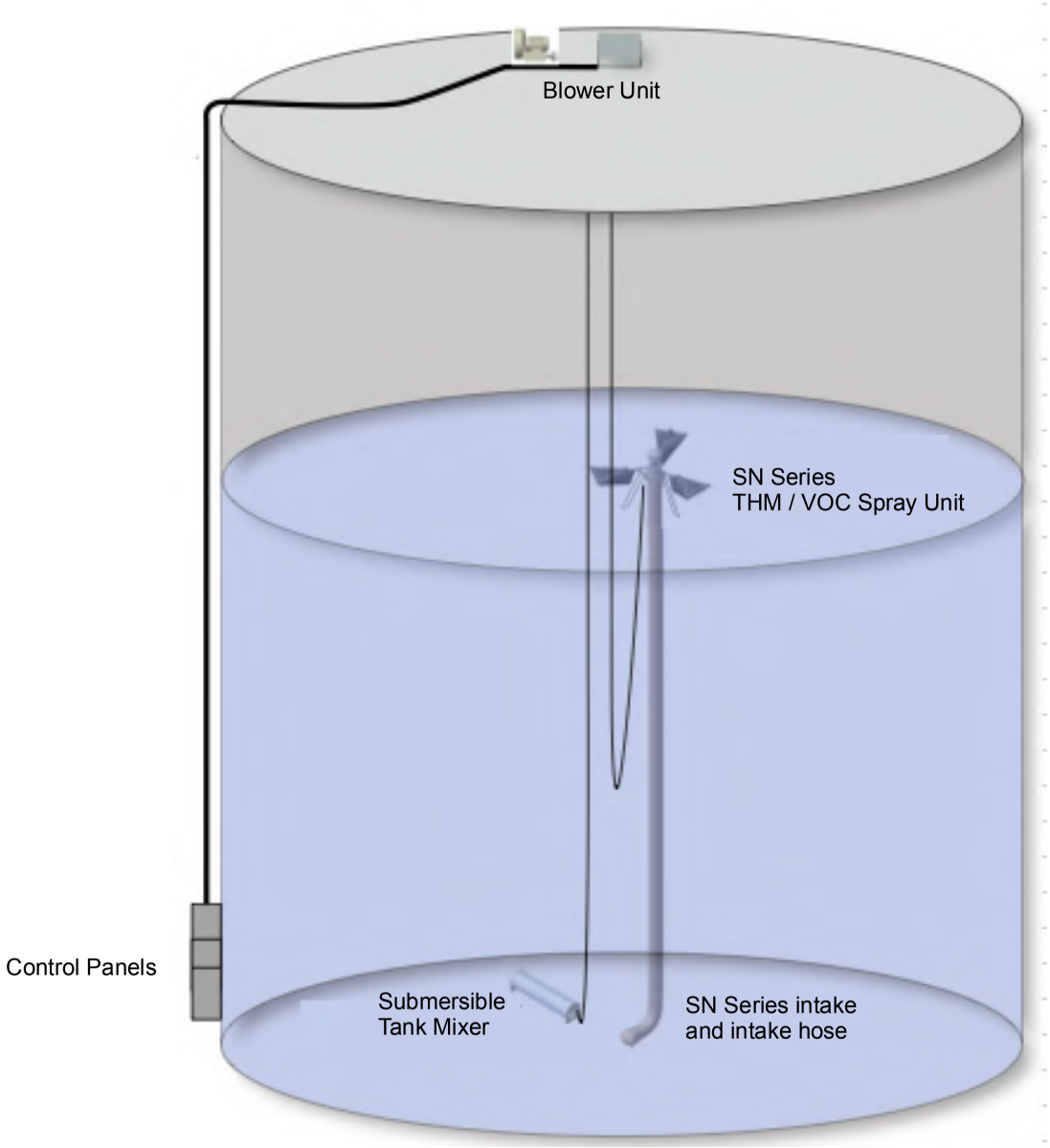


This is a sketch of a typical THM / VOC single system supplied in in a GST Tank.

This system can be installed in clearwells and all types of tanks.

Multiple SN units can be installed in a clearwell or tank to treat higher volumes of outflow to distribution.

Blower can be installed at ground level with ducting to the top of the tank.

Various types and sizes of mixers are available to help prevent un-treated water from leaving the tank.

# In-Tank - SN Series Floating Unit

***Performance Guaranteed***
***No Need to Drain the Tank, No Disruption in Service***
***Portable – Scalable – Factory Placement***

# Ventilation System: 2hp Blower Unit

# Ventilation System: 3hp / 5hp Blower Unit

# Control Panels – Optional

***Optional Control Panels can be purchased with the equipment or the customer can have their electrician supply the panels.***

**From:** Joe Maris <jmaris@raylindsey.com>
**Sent:** Wednesday, September 19, 2018 8:47 AM
**To:** Brian Hoellein
**Subject:** RE: Eureka, MO
**Attachments:** Budget_1830462_x1.pdf

**Categories:** Filed by Newforma

Good morning Brian,

Attached is a budgetary proposal for the three GA drawings I had sent last Friday. All are an induced draft design with loose fill-for air stripping. See WesTech's comments below:

FROM WESTECH
At 3.0 cfm/gpm and 25 gpm/sqft they can expect ~95% removal of $CO_2$ in the effluent. An important factor to consider with these loose fill air strippers is the presence of iron. 0.5-1.0 mg/L of Iron is the transitional range where we recommend slat tray over loose fill. At this range or greater, the media fouls relatively quickly and can result in costly maintenance. A slat tray aerator will result in about a 50% reduction in $CO_2$.

Let me know what else we can do to help.

Joe

---

**From:** Joe Maris
**Sent:** Friday, September 14, 2018 3:40 PM
**To:** 'Brian Hoellein'
**Subject:** RE: Eureka, MO

Hey Brian,

Here are the PDF versions of these aerators. I'll have some more info for you next week.

Send the RO info that we discussed and I will get you info for that as well. Have a good weekend.

Joe

# Eureka

Missouri


**Represented by**
Joe Maris
Ray Lindsey Company
Belton, Missouri
(816) 388-7440
jmaris@raylindsey.com

**Furnished by**
Ian Fife
ifife@westech-inc.com


WesTech Opportunity Number: 1830462
Wednesday, September 19, 2018

# Item A – Aluminum Induced Draft Aerator

| Design Criteria | |
|---|---|
| Design Flow per Aerator | 510-625 gpm |
| Number of Aerators | 1 |
| Size of Aerator | 5 ft square x 10 ft in shell height |
| Hydrualic Loading Rate | 25 gpm/ft$^2$ maximum |
| Blower Capacity | 1,875 scfm |
| Air/Water Ratio | 3 scfm/gpm |
| Blower Horsepower | ½ hp |
| Number of Blowers/unit | 1 |
| Media Type | Loose fill |

## Technical Description

Induced draft aeration is an effective, inexpensive and low-maintenance method of improving finished water quality in a large number of applications. Air is induced up through the aerator chamber, while water is introduced at the top of the unit, evenly distributed with a gravity tray, and free-falls through the aerator media. Upflowing air sweeps through the falling water to increase the oxygen content. Dissolved solids such as iron are transformed to their oxidized states, enabling them to be removed by downstream equipment. In addition, unwanted dissolved gases (e.g. carbon dioxide, hydrogen sulfide, VOC) are removed to reduce chemical requirements, stabilize pH, or eliminate objectionable tastes and odors.

## Key Features and Benefits

- Gravity inlet tray ensures uniform water distribution and air collection across internals while minimizing inlet pressure requirements, reduces pumping power costs compared to spray aerators.
- Aluminum construction eliminates painting and is corrosion resistant for simplified maintenance.
- Multiple internal media configurations optimize treatment performance.

## The following budget pricing includes:

Square aluminum aerator housing with hinged and bolted side with support legs. Screened air intake and exhaust. Inspection port below the internals. Flanged inlet connection and plain end effluent connection. Moisture separator. Aluminum distribution tray. Five foot depth of loose fill media. Aluminum and stainless steel induction blower with TENV drive motor. Freight to the job site and startup service.

## Item B – Aluminum Induced Draft Aerator

| Design Criteria | |
|---|---|
| Design Flow per Aerator | 760-900 gpm |
| Number of Aerators | 1 |
| Size of Aerator | 6 ft square x 10 ft in shell height |
| Hydrualic Loading Rate | 25 gpm/ft$^2$ maximum |
| Blower Capacity | 2,700 scfm |
| Air/Water Ratio | 3 scfm/gpm |
| Blower Horsepower | ½ hp |
| Number of Blowers/unit | 1 |
| Media Type | Loose fill |

## Item C – Aluminum Induced Draft Aerator

| Design Criteria | |
|---|---|
| Design Flow per Aerator | 905-1,055 gpm |
| Number of Aerators | 1 |
| Size of Aerator | 6.5 ft square x 10 ft in shell height |
| Hydrualic Loading Rate | 25 gpm/ft$^2$ maximum |
| Blower Capacity | 3,169 scfm |
| Air/Water Ratio | 3 scfm/gpm |
| Blower Horsepower | ½ hp |
| Number of Blowers/unit | 1 |
| Media Type | Loose fill |

*This proposal has been reviewed and is approved for issue by Mike Stotzer on September 19, 2018.*

# Budget Pricing

Proposal Name: Eureka, Missouri
Proposal Number: 1830462
Wednesday, September 19, 2018

## 1. Bidder's Contact Information

| | |
|---|---|
| Company Name | WesTech Engineering, Inc. |
| Contact Name | Ian Fife |
| Phone | 801.265.1000 |
| Email | ifife@westech-inc.com |
| Address: Number/Street | 3665 S West Temple |
| Address: City, State, Zip | Salt Lake City, UT 84115 |

## 2. Pricing

| | |
|---|---|
| Currency | US Dollars |

### Scope of Supply

| | | |
|---|---|---|
| A | Aluminum Induced Draft Aerator | $40,000 |
| B | Aluminum Induced Draft Aerator | $45,000 |
| C | Aluminum Induced Draft Aerator | $50,000 |
| | Taxes (sales, use, VAT, IVA, IGV, duties, import fees, etc.) | Not Included |

Prices are for a period not to exceed 30 days from date of proposal.

### Field Service

| | |
|---|---|
| Daily Rate | $1,200 |

Prices do not include field service unless noted, but it is available at the daily rate plus expenses. The customer will be charged for a minimum of three days for time at the jobsite. Travel will be billed at the daily rate. Any canceled charges due to the customer's request will be added to the invoice. The greater of visa procurement time or a two week notice is required prior to trip departure date.

## 3. Payment Terms

| | |
|---|---|
| Submittals Approved | 15% |
| Release for Fabrication | 35% |
| Net 30 days from Shipment | 50% |

All payments are net 30 days. Partial shipments are allowed. Other terms per WesTech proforma invoice.

## 4. Schedule

| | |
|---|---|
| Submittals, after PO receipt | 6 to 8 Weeks |
| Customer Review Period | 2 weeks |
| Ready to Ship, after Submittal Approval | 18 to 20 weeks |
| Total Weeks from PO to Shipment | 26 to 30 weeks |

Terms & Conditions: This proposal, including all terms and conditions contained herein, shall become part of any resulting contract or purchase order. Changes to any terms and conditions, including but not limited to submittal and shipment days, payment terms, and escalation clause shall be negotiated at order placement, otherwise the proposal terms and conditions contained herein shall apply.

Freight: Prices quoted are F.O.B. shipping point with freight allowed to a readily accessible location nearest to jobsite. All claims for damage or loss in shipment shall be initiated by purchaser.

Paint: If your equipment has paint included in the price, please take note to the following. Primer paints are designed to provide only a minimal protection from the time of application (usually for a period not to exceed 30 days). Therefore, it is imperative that the finish coat be applied within 30 days of shipment on all shop primed surfaces. Without the protection of the final coatings, primer degradation may occur after this period, which in turn may require renewed surface preparation and coating. If it is impractical or impossible to coat primed surfaces within the suggested time frame, WesTech strongly recommends the supply of bare metal, with surface preparation and coating performed in the field. All field surface preparation, field paint, touch-up, and repair to shop painted surfaces are not by WesTech.

| BILL OF MATERIAL | | | | | | | |
|---|---|---|---|---|---|---|---|
| POS | UNIT QTY | ITEM CODE | DESCRIPTION | MATERIAL | LENGTH, IN | WIDTH, IN | TOTAL WT, LB |
| 10 | 1 | W3T153108 | SAS AIDA 60SQX10FT LF 530-685GPM 2260SCFM | | | | 1053.2 |
| 20 | 1 | W3T237210 | BLOWER ID-184 230V 3P 0.5HP | | | | 91.8 |
| 30 | 4 | W2T77396 | BOLT,0.25IN DIA, 1 IN LG SS | STN STL, 18-8 | | | 0.1 |
| 40 | 4 | W2T296743 | WASHER;0.25 IN; BONDED | STN STL, 18-8 | | | 0.0 |
| 110 | 125 | W2T436621 | PACKNG;PLASTIC;3.5 IN;POLYPROPYLENE | POLYPROPYLENE | | | 350.0 |
| 120 | 2 | W2T301959 | ADHSV/SEALANT;PERMATEX | SILICONE | | | 4.0 |

APPROX. OPERATING WEIGHT: 4795 LB

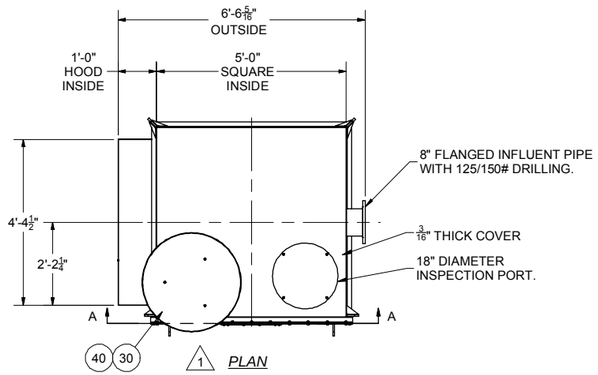


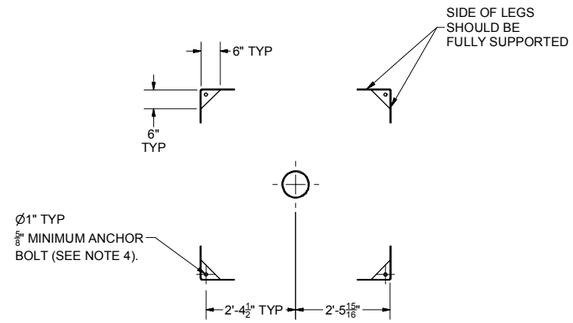


SECTION B-B

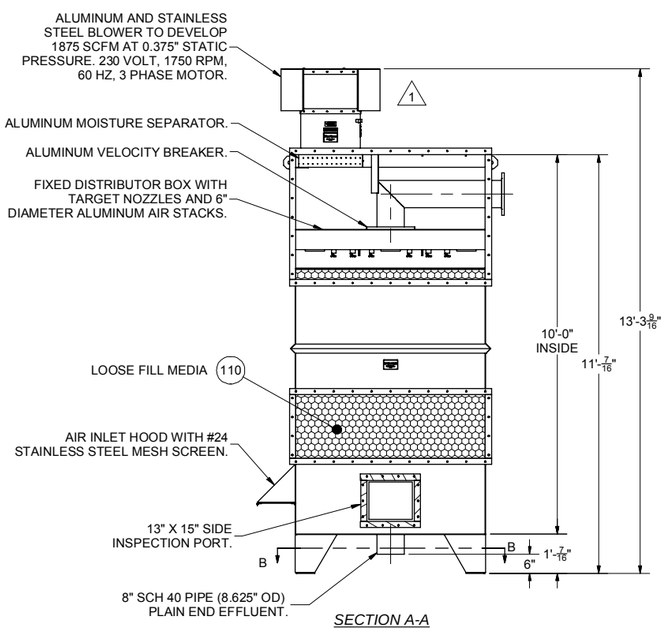


SECTION A-A

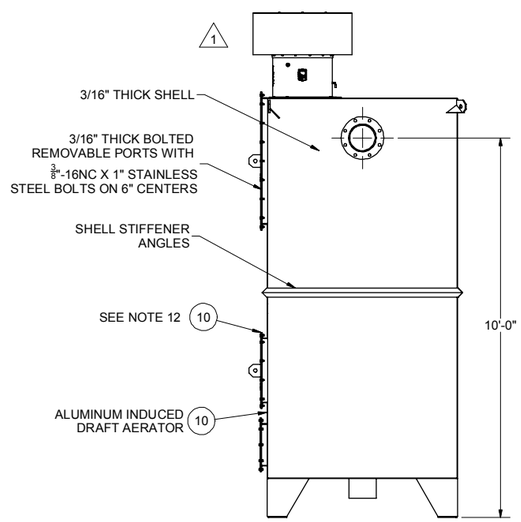


SIDE ELEVATION

*ADDITIONAL NOTES:*

1.) AERATOR IS SHIPPED FULLY ASSEMBLED EXCEPT FOR SOME AIR HANDLING EQUIPMENT. REFER TO BILL OF MATERIAL FOR IDENTIFICATION OF FIELD ASSEMBLED ITEMS.
2.) ALL AERATOR PLATE IS TO BE 3003 ALUMINUM. STRUCTURALS TO BE 6061 ALUMINUM.
3.) THE AERATOR SHALL BE WELDED INSIDE AND OUTSIDE WITH FILLET WELDS EQUAL TO THE THICKNESS OF THE PLATES. ALL MAIN HOUSING SEAM WELDS SHALL BE DYE PENETRANT CHECKED AT THE FACTORY BEFORE SHIPMENT TO ENSURE THEY ARE WATERTIGHT.
4.) THE MAXIMUM ANCHOR BOLT DIAMETER IS 7/8". THE MINIMUM WASHER DIAMETER IS 2" FOR ALL ANCHOR SIZES. ANCHORAGE IS BY OTHERS.
5.) FLANGE BOLT HOLE PATTERN IS TO STRADDLE UNIT CENTERLINE.
6.) AERATOR INLET AND EFFLUENT PIPE STUBS ARE NOT DESIGNED TO SUPPORT INLET AND EFFLUENT PIPING. ADDITIONAL PIPE SUPPORTS SHOULD BE USED BUT WILL BE SUPPLIED BY OTHERS.
7.) INFLUENT AND EFFLUENT PIPE MOUNTING HARDWARE AND GASKETS ARE PROVIDED BY OTHERS.
8.) IF INSTALLATION INSTRUCTIONS ARE NOT CLEARLY UNDERSTOOD, CONSULT WESTECH ENGINEERING FOR ADDITIONAL INFORMATION BEFORE COMMENCING ERECTION.
9.) IMPROPER STORAGE, HANDLING, INSTALLATION, OR FIELD MODIFICATIONS OF EQUIPMENT MAY RESULT IN DAMAGE AND LOSS OF WARRANTY PROTECTION.
10.) THE BLOWER MOTOR MUST BE WIRED CORRECTLY TO THE VOLTAGE LISTED ON THE UNIT.
11.) REMOVE THE DRAIN PLUG ON THE BLOWER CONDENSATION DRAIN BEFORE START UP.
12.) PLACE 3/8" BEAD OF BLUE PERMATEX SEALANT (PIECE 120) ON PORT COVERS INSIDE OF BOLT PATTERN BEFORE INSTALLING BOLTS.
13.) AERATOR MEDIA SHIPPED LOOSE FOR FIELD INSTALLATION.

| REV | DESCRIPTION | DATE | DWN | CHKD | APVD | ECN |
|---|---|---|---|---|---|---|
| 1 | UPDATED TO REFLECT 3i BLOWER IMPROVEMENTS | 5/3/2012 | SCJ | | SCJ | 1142 |
| 0 | RELEASE FOR FABRICATION | 11/10/2010 | MAM | RLJ | SCJ | |

STD: BORDER-1101-22X34D

INTL REF:

BAR = 1" AT PLOT SCALE

*COMPANY CONFIDENTIAL*

THIS DRAWING IS PROPERTY OF WESTECH ENGINEERING, INC. AND IS TRANSMITTED IN CONFIDENCE. NEITHER RECEIPT NOR POSSSESSION CONFERS OR TRANSFERS ANY RIGHTS TO REPRODUCE, USE, OR DISCLOSE, IN WHOLE OR IN PART, DATA CONTAINED HEREIN FOR ANY PURPOSE, WITHOUT THE WRITTEN PERMISSION OF WESTECH ENGINEERING, INC.

| | | |
|---|---|---|
| DESIGNER | MAM | 11/10/2010 |
| CHECKER | RLJ | 12/3/2010 |
| ENGINEER | SCJ | 11/10/2010 |
| MANAGER | | |
| FILE: | | |
| SCALE: | 1/2" = 1'-0" | |

TITLE: MECHANICAL AERATION
INDUCED DRAFT AERATOR
60IN SQ X 120IN HIGH, 6IN SF, 530-685GPM, 2260SCFM MAX

CLIENT

WESTECH

*MICROFLOC/General Filter Products*
*Ames, IA*
*515-268-8400*

| PROJECT | CODE | DRAWING | SHEET | REV |
|---|---|---|---|---|
| 900166 | W3T153125 | 9001664020 | 1 OF 1 | 1 |

C:\vault\Design\Projects\9000\900166 60 SQ X 120 AIDA\G-Drawings\Mechanical\Parametrics\Workgroup\IDW Files\9001664020-MD.idw

| BILL OF MATERIAL | | | | | | | |
|---|---|---|---|---|---|---|---|
| POS | UNIT QTY | ITEM CODE | DESCRIPTION | MATERIAL | LENGTH, IN | WIDTH, IN | TOTAL WT, LB |
| 10 | 1 | W3T153110 | SAS AIDA 72SQX10FT LF 815-1050GPM 2720SCFM | | | | 1413.6 |
| 20 | 1 | W3T237227 | BLOWER ID-204 230V 3P 0.5HP | | | | 102.6 |
| 30 | 4 | W2T77396 | BOLT,0.25IN DIA, 1 IN LG SS | STN STL, 18-8 | | | 0.1 |
| 40 | 4 | W2T296743 | WASHER;0.25 IN; BONDED | STN STL, 18-8 | | | 0.0 |
| 110 | 180 | W2T436621 | PACKNG;PLASTIC;3.5 IN;POLYPROPYLENE | POLYPROPYLENE | | | 504.0 |
| 120 | 3 | W2T301959 | ADHSV/SEALANT;PERMATEX | SILICONE | | | 6.0 |

APPROX. OPERATING WEIGHT: 6615 LB

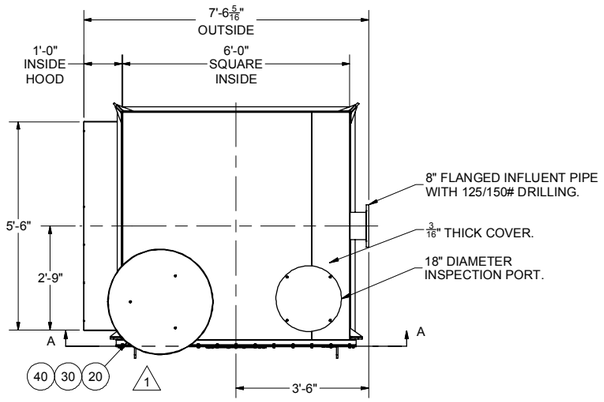


PLAN

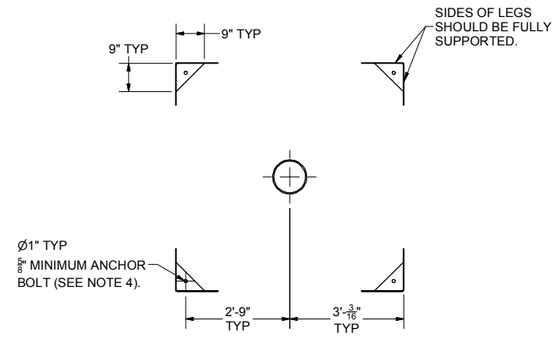


SECTION B-B

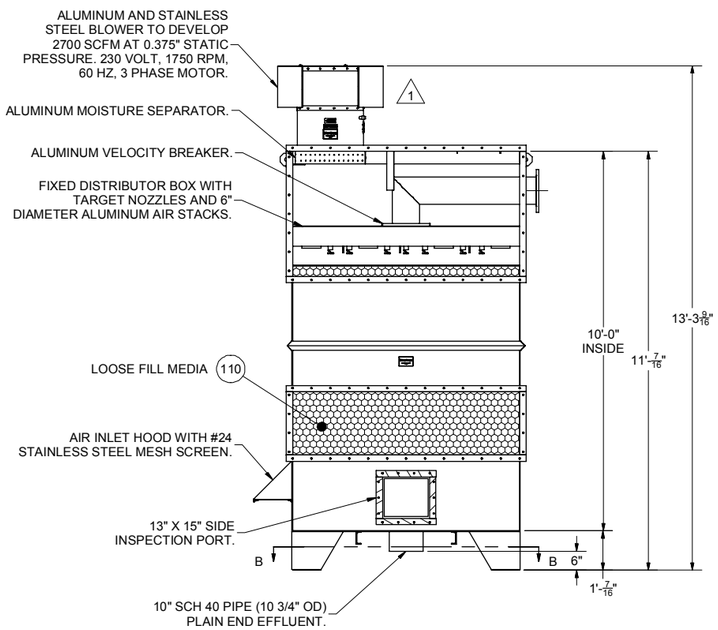


SECTION A-A

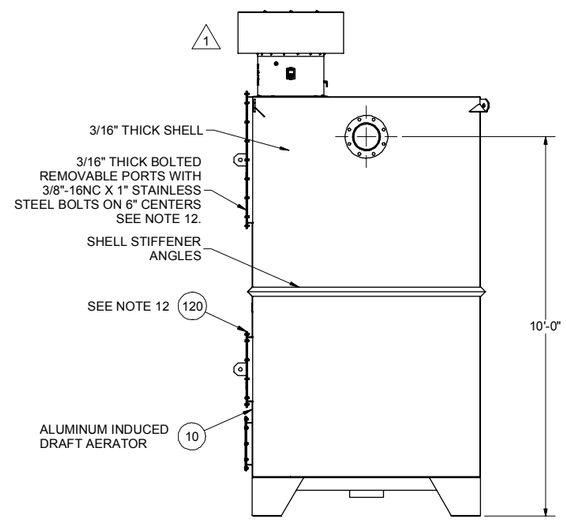


SIDE ELEVATION

*ADDITIONAL NOTES:*

1.) AERATOR IS SHIPPED FULLY ASSEMBLED EXCEPT FOR SOME AIR HANDLING EQUIPMENT. REFER TO BILL OF MATERIAL FOR IDENTIFICATION OF FIELD ASSEMBLED ITEMS.
2.) ALL AERATOR PLATE IS TO BE 3003 ALUMINUM. STRUCTURALS TO BE 6061 ALUMINUM.
3.) THE AERATOR SHALL BE WELDED INSIDE AND OUTSIDE WITH FILLET WELDS EQUAL TO THE THICKNESS OF THE PLATES. ALL MAIN HOUSING SEAM WELDS SHALL BE DYE PENETRANT CHECKED AT THE FACTORY BEFORE SHIPMENT TO ENSURE THEY ARE WATERTIGHT.
4.) THE MAXIMUM ANCHOR BOLT DIAMETER IS 7/8". THE MINIMUM WASHER DIAMETER IS 2" FOR ALL ANCHOR SIZES. ANCHORAGE IS BY OTHERS.
5.) FLANGE BOLT HOLE PATTERN IS TO STRADDLE UNIT CENTERLINE.
6.) AERATOR INLET AND EFFLUENT PIPE STUBS ARE NOT DESIGNED TO SUPPORT INLET AND EFFLUENT PIPING. ADDITIONAL PIPE SUPPORTS SHOULD BE USED BUT WILL BE SUPPLIED BY OTHERS.
7.) INFLUENT AND EFFLUENT PIPE MOUNTING HARDWARE AND GASKETS ARE PROVIDED BY OTHERS.
8.) IF INSTALLATION INSTRUCTIONS ARE NOT CLEARLY UNDERSTOOD, CONSULT WESTECH ENGINEERING FOR ADDITIONAL INFORMATION BEFORE COMMENCING ERECTION.
9.) IMPROPER STORAGE, HANDLING, INSTALLATION, OR FIELD MODIFICATIONS OF EQUIPMENT MAY RESULT IN DAMAGE AND LOSS OF WARRANTY PROTECTION.
10.) THE BLOWER MOTOR MUST BE WIRED CORRECTLY TO THE VOLTAGE LISTED ON THE UNIT.
11.) REMOVE THE DRAIN PLUG ON THE BLOWER CONDENSATION DRAIN BEFORE START UP.
12.) PLACE 3/8" BEAD OF BLUE PERMATEX SEALANT (PIECE 120) ON PORT COVERS INSIDE OF BOLT PATTERN BEFORE INSTALLING BOLTS.
13.) AERATOR MEDIA SHIPPED LOOSE FOR FIELD INSTALLATION.

| REV | DESCRIPTION | DATE | DWN | CHKD | APVD | ECN |
|---|---|---|---|---|---|---|
| 1 | UPDATED TO REFLECT 3i BLOWER IMPROVEMENTS | 5/3/2012 | SCJ | | SCJ | 1142 |
| 0 | RELEASE FOR FABRICATION | 11/12/2010 | CB | JHS | SCJ | |

STD: BORDER-1101-22X34D

INTL REF:

BAR = 1" AT PLOT SCALE

*COMPANY CONFIDENTIAL*

THIS DRAWING IS PROPERTY OF WESTECH ENGINEERING, INC. AND IS TRANSMITTED IN CONFIDENCE. NEITHER RECEIPT NOR POSSSESSION CONFERS OR TRANSFERS ANY RIGHTS TO REPRODUCE, USE, OR DISCLOSE, IN WHOLE OR IN PART, DATA CONTAINED HEREIN FOR ANY PURPOSE, WITHOUT THE WRITTEN PERMISSION OF WESTECH ENGINEERING, INC.

| | | |
|---|---|---|
| DESIGNER | CB | DATE 11/12/2010 |
| CHECKER | JHS | DATE 12/6/2010 |
| ENGINEER | SCJ | DATE 9/28/2010 |
| MANAGER | | DATE |
| FILE: | | |
| SCALE: | 1/2" = 1'-0" | |

TITLE: MECHANICAL AERATION
INDUCED DRAFT AERATOR
72IN SQ X 120IN HIGH, 6IN SF, 815-1050GPM, 2720SCFM MAX

CLIENT

WESTECH

*MICROFLOC/General Filter Products*
*Ames, IA*
*515-268-8400*

| PROJECT | CODE | DRAWING | SHEET | REV |
|---|---|---|---|---|
| 900168 | W3T153127 | 9001684020 | 1 OF 1 | 1 |

C:\vault\Design\Projects\9000\900168 72 SQ X 120 AIDA\G-Drawings\Mechanical\Parametrics\Workgroup\IDW Files\9001684020-MD.idw

| BILL OF MATERIAL | | | | | | | |
|---|---|---|---|---|---|---|---|
| POS | UNIT QTY | ITEM CODE | DESCRIPTION | MATERIAL | LENGTH, IN | WIDTH, IN | TOTAL WT, LB |
| 10 | 1 | W3T153111 | SAS AIDA 78SQX10FT LF 960-1235GPM 3620SCFM | | | | 1884.2 |
| 20 | 1 | W3T237234 | BLOWER ID-244L 230V 3P 0.5HP | | | | 115.7 |
| 30 | 4 | W2T77396 | BOLT,0.25IN DIA, 1 IN LG SS, SELF TAP | STN STL, 18-8 | | | 0.1 |
| 40 | 4 | W2T296743 | WASHER;0.25 IN; BONDED | STN STL, 18-8 | | | 0.0 |
| 110 | 212 | W2T436621 | PACKNG;PLASTIC;3.5 IN;POLYPROPYLENE | POLYPROPYLENE | | | 591.5 |
| 120 | 3 | W2T301959 | ADHSV/SEALANT;PERMATEX | SILICONE | | | 6.0 |

APPROX. OPERATING WEIGHT: 7740 LB

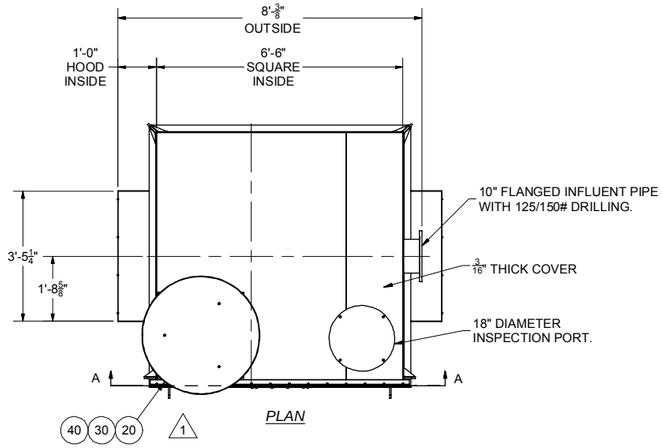


PLAN

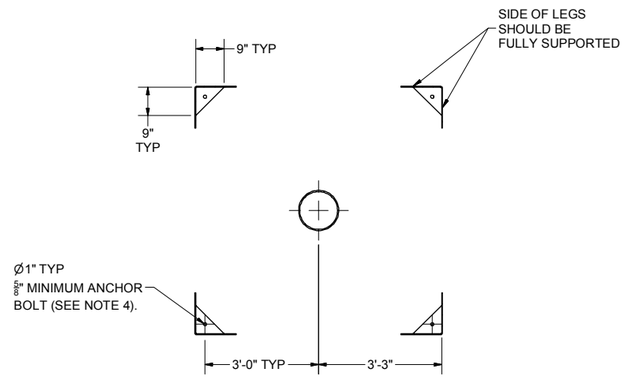


SECTION B-B

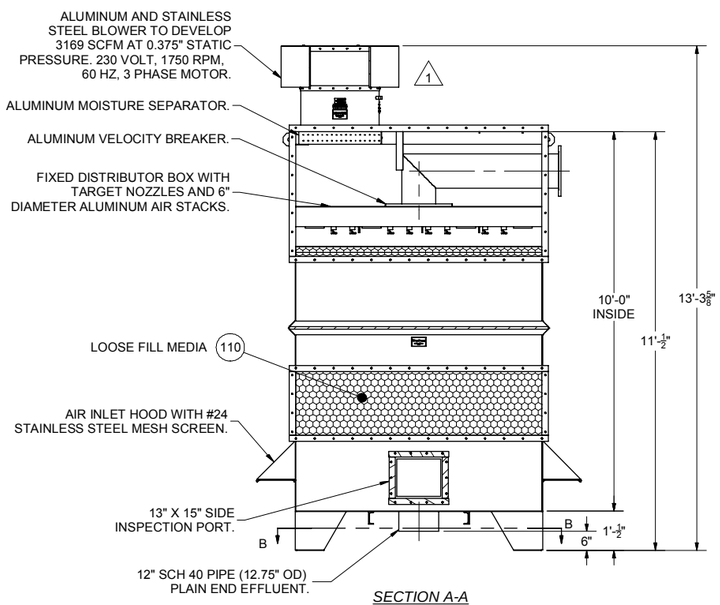


SECTION A-A

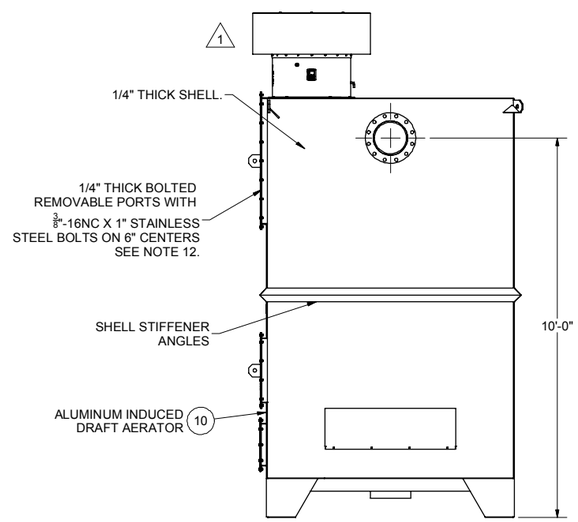


SIDE ELEVATION

*ADDITIONAL NOTES:*

1.) AERATOR IS SHIPPED FULLY ASSEMBLED EXCEPT FOR SOME AIR HANDLING EQUIPMENT. REFER TO BILL OF MATERIAL FOR IDENTIFICATION OF FIELD ASSEMBLED ITEMS.
2.) ALL AERATOR PLATE IS TO BE 3003 ALUMINUM. STRUCTURALS TO BE 6061 ALUMINUM.
3.) THE AERATOR SHALL BE WELDED INSIDE AND OUTSIDE WITH FILLET WELDS EQUAL TO THE THICKNESS OF THE PLATES. ALL MAIN HOUSING SEAM WELDS SHALL BE DYE PENETRANT CHECKED AT THE FACTORY BEFORE SHIPMENT TO ENSURE THEY ARE WATERTIGHT.
4.) THE MAXIMUM ANCHOR BOLT DIAMETER IS 7/8". THE MINIMUM WASHER DIAMETER IS 2" FOR ALL ANCHOR SIZES. ANCHORAGE IS BY OTHERS.
5.) FLANGE BOLT HOLE PATTERN IS TO STRADDLE UNIT CENTERLINE.
6.) AERATOR INLET AND EFFLUENT PIPE STUBS ARE NOT DESIGNED TO SUPPORT INLET AND EFFLUENT PIPING. ADDITIONAL PIPE SUPPORTS SHOULD BE USED BUT WILL BE SUPPLIED BY OTHERS.
7.) INFLUENT AND EFFLUENT PIPE MOUNTING HARDWARE AND GASKETS ARE PROVIDED BY OTHERS.
8.) IF INSTALLATION INSTRUCTIONS ARE NOT CLEARLY UNDERSTOOD, CONSULT WESTECH ENGINEERING FOR ADDITIONAL INFORMATION BEFORE COMMENCING ERECTION.
9.) IMPROPER STORAGE, HANDLING, INSTALLATION, OR FIELD MODIFICATIONS OF EQUIPMENT MAY RESULT IN DAMAGE AND LOSS OF WARRANTY PROTECTION.
10.) THE BLOWER MOTOR MUST BE WIRED CORRECTLY TO THE VOLTAGE LISTED ON THE UNIT.
11.) REMOVE THE DRAIN PLUG ON THE BLOWER CONDENSATION DRAIN BEFORE START UP.
12.) PLACE 3/8" BEAD OF BLUE PERMATEX SEALANT (PIECE 120) ON PORT COVERS INSIDE OF BOLT PATTERN BEFORE INSTALLING BOLTS.
13.) AERATOR MEDIA SHIPPED LOOSE FOR FIELD INSTALLATION.

| REV | DESCRIPTION | DATE | DWN | CHKD | APVD | ECN |
|---|---|---|---|---|---|---|
| 1 | UPDATED TO REFLECT 3i BLOWER IMPROVEMENTS | 5/3/2012 | SCJ | | SCJ | 1142 |
| 0 | RELEASE FOR FABRICATION | 11/15/2010 | MAM | RLJ | SCJ | |

STD: BORDER-1101-22X34D

INTL REF:

BAR = 1" AT PLOT SCALE

*COMPANY CONFIDENTIAL*

THIS DRAWING IS PROPERTY OF WESTECH ENGINEERING, INC. AND IS TRANSMITTED IN CONFIDENCE. NEITHER RECEIPT NOR POSSSESSION CONFERS OR TRANSFERS ANY RIGHTS TO REPRODUCE, USE, OR DISCLOSE, IN WHOLE OR IN PART, DATA CONTAINED HEREIN FOR ANY PURPOSE, WITHOUT THE WRITTEN PERMISSION OF WESTECH ENGINEERING, INC.

| | | |
|---|---|---|
| DESIGNER | MAM | DATE 11/15/2010 |
| CHECKER | RLJ | DATE 12/7/2010 |
| ENGINEER | SCJ | DATE 11/15/2010 |
| MANAGER | | DATE |
| FILE: | | |
| SCALE: | 1/2" = 1'-0" | |

TITLE
MECHANICAL AERATION
INDUCED DRAFT AERATOR
78IN SQ X 120IN HIGH, 6IN SF, 960-1235GPM, 3620SCFM MAX

CLIENT

WESTECH
*MICROFLOC/General Filter Products*
*Ames, IA*
*515-268-8400*

| PROJECT | CODE | DRAWING | SHEET | REV |
|---|---|---|---|---|
| 900169 | W3T153128 | 9001694020 | 1 OF 1 | 1 |

C:\vault\Design\Projects\9000\900169 78 SQ X 120 AIDA\G-Drawings\Mechanical\Parametrics\Workgroup\IDW Files\9001694020-MD.idw

# APPENDIX E

# Pump Station Information

BAR IS ONE INCH ON OFFICIAL DRAWINGS. 0 1" IF NOT ONE INCH, ADJUST SCALE ACCORDINGLY.

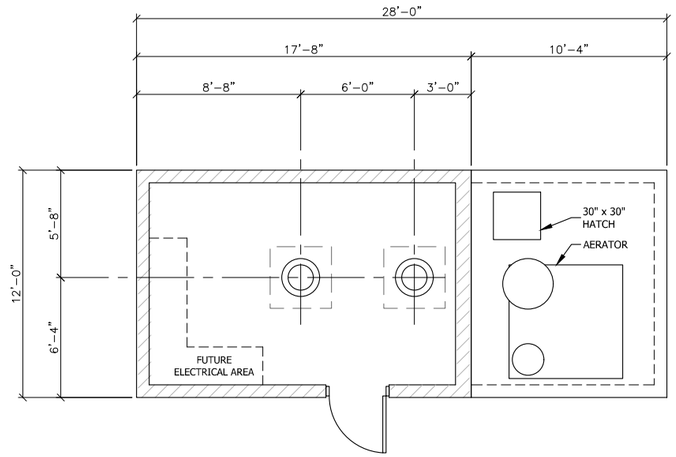


1. WET WELL HIGH WATER DEPTH: 9.0 FEET
2. WET WELL VOLUME: 17,500 GALLONS

WELL 1 & 10- HOWERTON & ASHTON BOOSTERS
NO SCALE

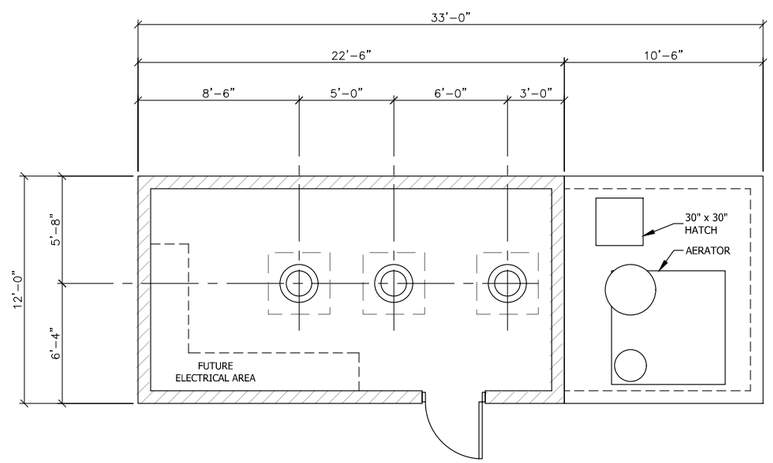


1. WET WELL HIGH WATER DEPTH: 9.0 FEET
2. WET WELL VOLUME: 20,900 GALLONS

WELL 5 - DREWEL BOOSTER
NO SCALE

SEE TABLE 8-1 FOR CONCEPT BOOSTER PUMP DESIGN CRITERIA

| # | DATE | DESCRIPTION | BY |
|---|---|---|---|


Bartlett & West
5900 S WESTERN AVE, SUITE 101 - SIOUX FALLS, SD 57108
PHONE 888.200.6464 - 605.274.7415
CERTIFICATE OF AUTHORITY NO. 000167
www.bartlettwest.com


# BOOSTER PLANS OVERALL PROCESS PLANS

EUREKA WELL IMPROVEMENTS
RO TREATMENT EVALUATION
CITY OF EUREKA, MO

PRELIMINARY

| | |
|---|---|
| DESIGNED BY: | DJH |
| DRAWN BY: | --- |
| APPROVED BY: | BLH |
| DESIGN PROJ: | 19500.002 |
| CONST PROJ: | --- |
| SCALE: | AS NOTED |
| DATE: | --- |
| DRAWING NO: | D20.20 |
| SHEET NO: | 6 of 6 |


ALL RIGHTS RESERVED. ALL BARTLETT & WEST PLANS, SPECIFICATIONS AND DRAWINGS ARE PROTECTED UNDER COPYRIGHT LAW, AND NO PART MAY BE COPIED, REPRODUCED, DISPLAYED PUBLICLY, USED TO CREATE DERIVATIVES, DISTRIBUTED, STORED IN A RETRIEVAL SYSTEM OR TRANSMITTED IN ANY FORM BY ANY MEANS WITHOUT PRIOR WRITTEN PERMISSION OF BARTLETT & WEST.



Last edit on: 11/2/2018 3:11 PM by: DJH01125 Drawing Name: w:\Proj\19500\19500\19500.002\AutoCad\Plan Set\19500.002_D_Well 1 Floor Plan.dwg Layout Name: Well 1 Booster Plan Plotted By: DJH01125 Plotted on: 11/2/2018 3:39:00 PM

**From:** George Wootten <gwootten@efi-solutions.com>
**Sent:** Wednesday, October 24, 2018 9:04 AM
**To:** Brian Hoellein
**Cc:** Dustin Diedrich; Bobby Lyerla; Drew Hess
**Subject:** FW: Eureka MO: Budget Request for Booster Stations
**Attachments:** Eureka, MO(4007) Example Drawing.pdf; Eureka, MO(4007) Example Drawing.dwg

Brian;

As to price estimates for the subject pump stations, delivered I would suggest you use $340,000 for the triplex station and $275,000 for the duplex pump station. These prices would be for a building with gabled, 3:12 pitch, standing seam metal roof with hatches and corrugated steel exterior. A change to a faux block exterior would be approximately $14,000 for the triplex building and $11,000 for the duplex building.

These prices should be somewhat conservative and be good through 2019. The only caveat would be after a long "quiet" period material prices have begun to increase, especially base metals. I've tried to cover some of that change. If you want a "safe" number, add 10% to each value.

I hope this is helpful.

© COPYRIGHT—ENGINEERED FLUID, INC.—2007

This drawing and all the information contained herein is the property of Engineered Fluid, Inc. and is to be retained in confidence, and, without the written permission of an officer of Engineered Fluid, Inc., is not to be duplicated, sent, shown or used for any other purpose than to disclose to the recipient a design concept, and this drawing is to be returned to Engineered Fluid, Inc., upon demand.

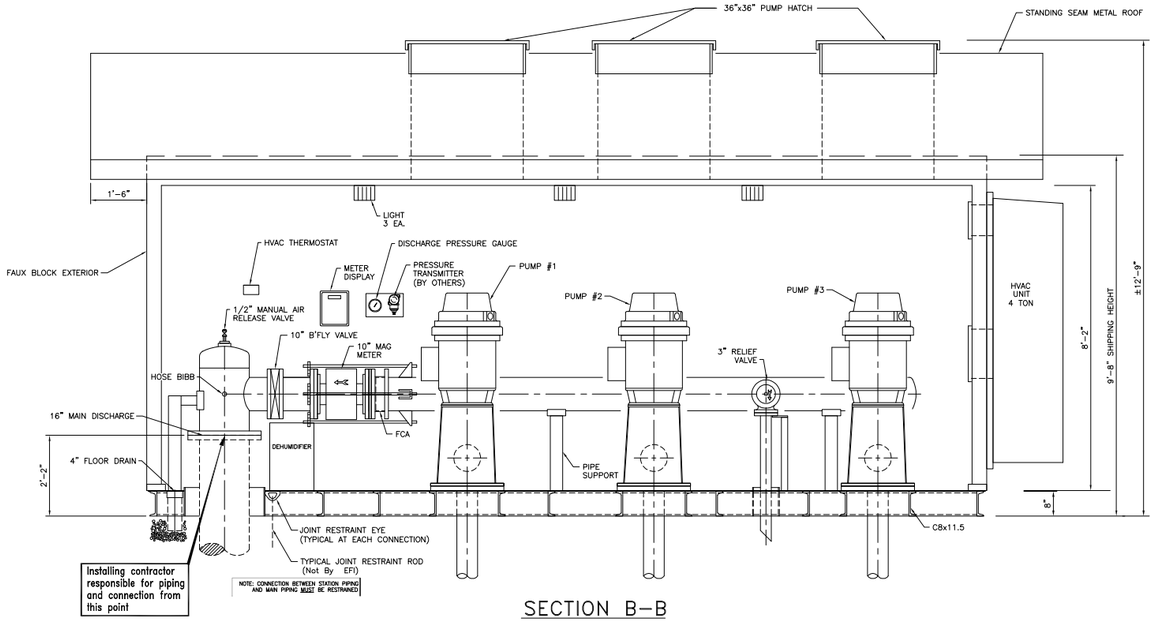


SECTION B–B

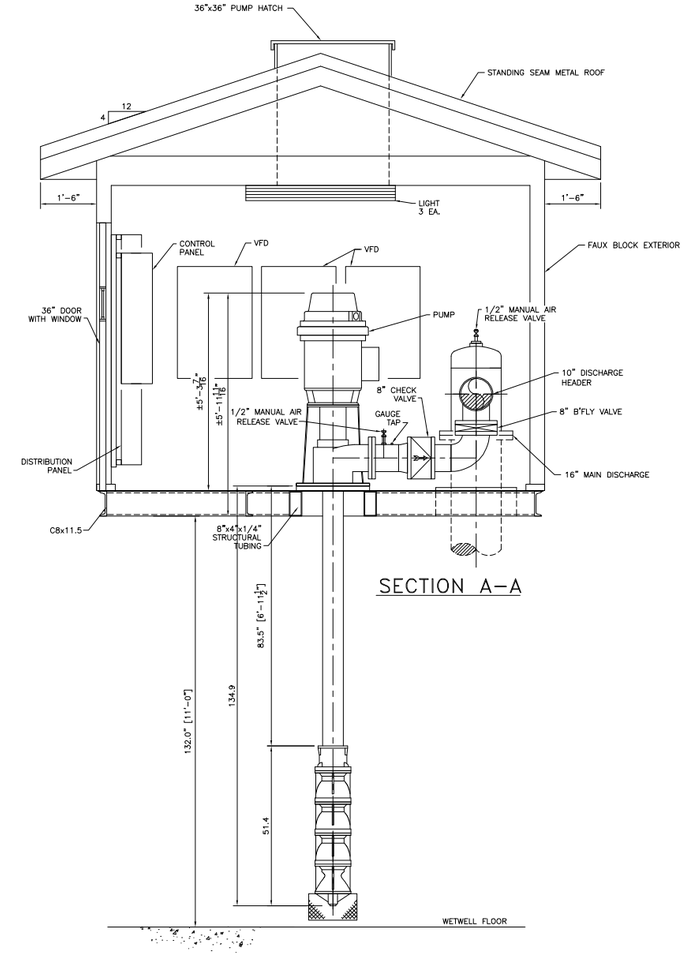


SECTION A–A

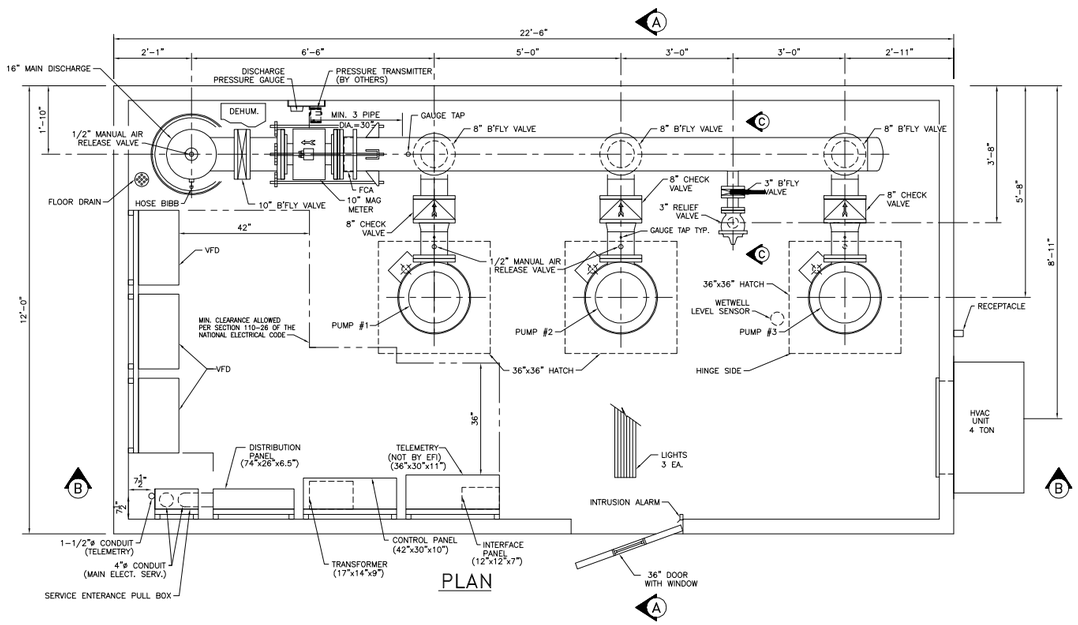


PLAN

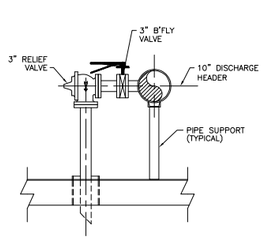


SECTION C–C

## GENERAL NOTES

ALL PIPING AND EQUIPMENT WILL BE ADEQUATELY SUPPORTED AND BRACED

FCA – FLANGED COUPLING ADAPTER

PLATE & STRUCTURAL STEEL: ASTM A–36

STRUCTURAL TUBING: A500, GRADE B

## CONTRACTOR'S NOTES

**SCHEDULE 40 STEEL PIPE**

MAIN DISCHARGE:
16" ANSI STANDARD B16.5, CLASS 150 FLANGE

DEHUMIDIFIER MUST BE POWERED UP AND TURNED ON IMMEDIATELY AFTER THE STATION IS SET IN PLACE.

SHIMS MAY BE REQUIRED AROUND PERIMETER OF WATERSHED TO ENSURE PROPER LEVEL. WITHOUT PROPER LEVEL ENGINEERED FLUID CANNOT BE RESPONSIBLE FOR PROPER DOOR OPERATION.

THE STATION IS NOT DESIGNED TO ACCEPT PIPELINE FORCES. THRUST BLOCKING MUST BE PROVIDED EXTERNAL TO THE STATION.

PLEASE NOTE ORIENTATION ON THE INLET AND OUTLET PIPE AND ELECTRICAL CONDUIT LOCATIONS IN REFERENCE TO THE JOBSITE LAYOUT. EFI CANNOT BE HELD RESPONSIBLE UNLESS CONFIRMATION ON THESE ORIENTATIONS IS RECEIVED THROUGH THE APPROVED SUBMITTALS.

| DRAWN BY: DD | CHECKED BY: | SCALE: 1/2" = 1'-0" |
|---|---|---|

ENGINEERED FLUID, INC.
P.O. DRAWER 723 * CENTRALIA, ILLINOIS 62801 * 618-533-1351

# BOOSTER PUMP STATION

This drawing is conceptual and does not reveal certain details and manufacturing processes required to successfully build the equipment. As such, Engineered Fluid, Inc. is not responsible for injury or damages caused by any unauthorized fabrication or assembly using all or any part of this drawing.

| JOB REF NO. PRELIM. | DRWG. NO. PRELIMINARY |
|---|---|

# APPENDIX F

# Site Drawings

BAR IS ONE INCH ON OFFICIAL DRAWINGS. 0 1" IF NOT ONE INCH, ADJUST SCALE ACCORDINGLY.

| # | DATE | DESCRIPTION | BY |
|---|---|---|---|


Bartlett&West
1200 SW EXECUTIVE DRIVE - TOPEKA KS 66615.3850
PHONE 785.272.2252 - FAX 785.273.8735
####
www.bartlettwest.com


# LOCATION MAP

TO#2: RO TREATMENT EVALUATION
CITY OF EUREKA
EUREKA, MISSOURI

PRELIMINARY

| | |
|---|---|
| SEALED DATE: | #### |
| DESIGNED BY: | CLY |
| DRAWN BY: | CLY |
| APPROVED BY: | BLH |
| DESIGN PROJ: | 19500.002 |
| DATE: | AUG 2018 |
| DRAWING NO: | CVR |
| SHEET NO: | 00 of 07 |


ALL RIGHTS RESERVED. ALL BARTLETT & WEST PLANS, SPECIFICATIONS AND DRAWINGS ARE PROTECTED UNDER COPYRIGHT LAW, AND NO PART MAY BE COPIED, REPRODUCED, DISPLAYED PUBLICLY, USED TO CREATE DERIVATIVES, DISTRIBUTED, STORED IN A RETRIEVAL SYSTEM OR TRANSMITTED IN ANY FORM BY ANY MEANS WITHOUT PRIOR WRITTEN PERMISSION OF BARTLETT & WEST.



Last edit on: 10/31/2018 1:13 PM by: DJH01125 Drawing Name: W:\Proj\19500\19500\19500.002\AutoCad\Plan Set\19500.002 C-WellSites.dwg Layout Name: Cover Plotted By: DJH01125 Plotted on: 10/31/2018 1:26:45 PM

BAR IS ONE INCH ON OFFICIAL DRAWINGS. 0 1" IF NOT ONE INCH, ADJUST SCALE ACCORDINGLY.

## GENERAL NOTES

### EXISTING FACILITIES

1. GENERATOR
2. SALT BRINE TANK
3. WELL
4. HVAC- EQUIPMENT
5. TANK
6. BOOSTER STATION
7. TREATMENT BUILDING
8. CHLORINE CONTACT PIPING

### PROPOSED FACILITIES

1. TREATMENT BUILDING
2. WETWELL / AERATOR / BOOSTER
3. AERATION IN-TANK

0 20' 40'
SCALE: 1" = 20'

| # | DATE | DESCRIPTION | BY |
|---|---|---|---|


Bartlett&West
1200 SW EXECUTIVE DRIVE - TOPEKA KS 66615.3850
PHONE 785.272.2252 - FAX 785.273.8735
www.bartlettwest.com


# WELL#1 (HOWERTON) EXISTING SITE PLAN

TO#2: RO TREATMENT EVALUATION
CITY OF EUREKA
EUREKA, MISSOURI

PRELIMINARY

| | |
|---|---|
| SEALED DATE: | #### |
| DESIGNED BY: | CLY |
| DRAWN BY: | CLY |
| APPROVED BY: | BLH |
| DESIGN PROJ: | 19500.002 |
| DATE: | AUG 2018 |
| DRAWING NO: | WELL #1 |
| SHEET NO: | 01 of 07 |


ALL RIGHTS RESERVED. ALL BARTLETT & WEST PLANS, SPECIFICATIONS AND DRAWINGS ARE PROTECTED UNDER COPYRIGHT LAW, AND NO PART MAY BE COPIED, REPRODUCED, DISPLAYED PUBLICLY, USED TO CREATE DERIVATIVES, DISTRIBUTED, STORED IN A RETRIEVAL SYSTEM OR TRANSMITTED IN ANY FORM BY ANY MEANS WITHOUT PRIOR WRITTEN PERMISSION OF BARTLETT & WEST.



Last edit on: 10/31/2018 3:34 PM by: DJH01125 Drawing Name: W:\Proj\19500\19500\19500.002\AutoCad\Plan Set\19500.002 C_WellSites.dwg Layout Name: Well#1 Plotted By: DJH01125 Plotted on: 10/31/2018 4:09:18 PM

BAR IS ONE INCH ON OFFICIAL DRAWINGS. 0 1" IF NOT ONE INCH, ADJUST SCALE ACCORDINGLY.

## GENERAL NOTES

### EXISTING FACILITIES

1. GENERATOR
2. SALT BRINE TANK
3. WELL
4. HVAC- EQUIPMENT
5. TANK
6. BOOSTER STATION
7. TREATMENT BUILDING
8. CHLORINE CONTACT PIPING

### PROPOSED FACILITIES

1. TREATMENT BUILDING
2. WETWELL / AERATOR / BOOSTER
3. AERATION IN-TANK

0 20' 40'

SCALE: 1" = 20'

| # | DATE | DESCRIPTION | BY |
|---|---|---|---|


Bartlett&West

1200 SW EXECUTIVE DRIVE - TOPEKA KS 66615.3850
PHONE 785.272.2252 - FAX 785.273.8735
####
www.bartlettwest.com


# WELL#5 (DREWEL) EXISTING SITE PLAN

TO#2: RO TREATMENT EVALUATION
CITY OF EUREKA
EUREKA, MISSOURI

PRELIMINARY

| | |
|---|---|
| SEALED DATE: | #### |
| DESIGNED BY: | CLY |
| DRAWN BY: | CLY |
| APPROVED BY: | BLH |
| DESIGN PROJ: | 19500.002 |
| DATE: | AUG 2018 |
| DRAWING NO: | WELL #5 |
| SHEET NO: | 02 of 07 |


ALL RIGHTS RESERVED. ALL BARTLETT & WEST PLANS, SPECIFICATIONS AND DRAWINGS ARE PROTECTED UNDER COPYRIGHT LAW, AND NO PART MAY BE COPIED, REPRODUCED, DISPLAYED PUBLICLY, USED TO CREATE DERIVATIVES, DISTRIBUTED, STORED IN A RETRIEVAL SYSTEM OR TRANSMITTED IN ANY FORM BY ANY MEANS WITHOUT PRIOR WRITTEN PERMISSION OF BARTLETT & WEST.



Last edit on 10/31/2018 3:34 PM by: DJH01125 Drawing Name: W:\Proj\19500\19500\19500.002\AutoCad\Plan Set\19500.002 C_WellSites.dwg Layout Name: Well#5 Plotted By: DJH01125 Plotted on 10/31/2018 4:10:57 PM

BAR IS ONE INCH ON OFFICIAL DRAWINGS. 0 1" IF NOT ONE INCH, ADJUST SCALE ACCORDINGLY.

## GENERAL NOTES

### EXISTING FACILITIES

1. GENERATOR
2. SALT BRINE TANK
3. WELL
4. HVAC- EQUIPMENT
5. TANK
6. BOOSTER STATION
7. TREATMENT BUILDING
8. CHLORINE CONTACT PIPING

### PROPOSED FACILITIES

1. TREATMENT BUILDING
2. WETWELL / AERATOR / BOOSTER
3. AERATION IN-TANK

0 20' 40'
SCALE: 1" = 20'

| # | DATE | DESCRIPTION | BY |
|---|---|---|---|


Bartlett&West
1200 SW EXECUTIVE DRIVE - TOPEKA KS 66615.3850
PHONE 785.272.2252 - FAX 785.273.8735
www.bartlettwest.com


# WELL#6 (LEGEND) EXISTING SITE PLAN

TO#2: RO TREATMENT EVALUATION
CITY OF EUREKA
EUREKA, MISSOURI

PRELIMINARY

| | |
|---|---|
| SEALED DATE: | #### |
| DESIGNED BY: | CLY |
| DRAWN BY: | CLY |
| APPROVED BY: | BLH |
| DESIGN PROJ: | 19500.002 |
| DATE: | AUG 2018 |
| DRAWING NO: | WELL #6 |
| SHEET NO: | 03 of 07 |


ALL RIGHTS RESERVED. ALL BARTLETT & WEST PLANS, SPECIFICATIONS AND DRAWINGS ARE PROTECTED UNDER COPYRIGHT LAW, AND NO PART MAY BE COPIED, REPRODUCED, DISPLAYED PUBLICLY, USED TO CREATE DERIVATIVES, DISTRIBUTED, STORED IN A RETRIEVAL SYSTEM OR TRANSMITTED IN ANY FORM BY ANY MEANS WITHOUT PRIOR WRITTEN PERMISSION OF BARTLETT & WEST.



Last edit on: 10/31/2018 3:34 PM by: DJH01125 Drawing Name: W:\Proj\19500\19500\19500.002\AutoCad\Plan Set\19500.002 C- WellSites.dwg Layout Name: Well#6 Plotted By: DJH01125 Plotted on: 10/31/2018 4:11:26 PM

BAR IS ONE INCH ON OFFICIAL DRAWINGS. 0 1" IF NOT ONE INCH, ADJUST SCALE ACCORDINGLY.

## GENERAL NOTES

### EXISTING FACILITIES

1. GENERATOR
2. SALT BRINE TANK
3. WELL
4. HVAC- EQUIPMENT
5. TANK
6. BOOSTER STATION
7. TREATMENT BUILDING
8. CHLORINE CONTACT PIPING

### PROPOSED FACILITIES

1. TREATMENT BUILDING
2. WETWELL / AERATOR / BOOSTER
3. AERATION IN-TANK

0 20' 40'
SCALE: 1" = 20'

| # | DATE | DESCRIPTION | BY |
|---|---|---|---|


Bartlett&West
1200 SW EXECUTIVE DRIVE - TOPEKA KS 66615.3850
PHONE 785.272.2252 - FAX 785.273.8735
####
www.bartlettwest.com


# WELL#8 (VIOLA) EXISTING SITE PLAN

TO#2: RO TREATMENT EVALUATION
CITY OF EUREKA
EUREKA, MISSOURI

PRELIMINARY

| | |
|---|---|
| SEALED DATE: | #### |
| DESIGNED BY: | CLY |
| DRAWN BY: | CLY |
| APPROVED BY: | BLH |
| DESIGN PROJ: | 19500.002 |
| DATE: | AUG 2018 |
| DRAWING NO: | WELL #8 |
| SHEET NO: | 04 of 07 |


ALL RIGHTS RESERVED. ALL BARTLETT & WEST PLANS, SPECIFICATIONS AND DRAWINGS ARE PROTECTED UNDER COPYRIGHT LAW, AND NO PART MAY BE COPIED, REPRODUCED, DISPLAYED PUBLICLY, USED TO CREATE DERIVATIVES, DISTRIBUTED, STORED IN A RETRIEVAL SYSTEM OR TRANSMITTED IN ANY FORM BY ANY MEANS WITHOUT PRIOR WRITTEN PERMISSION OF BARTLETT & WEST.



Last edit on: 10/31/2018 3:24 PM by: DJH01125 Drawing Name: W:\Proj\19500\19500\19500.002\AutoCad\Plan Set\19500.002 C_WellSites.dwg Layout Name: Well#8 Plotted By: DJH01125 Plotted on: 10/31/2018 4:12:03 PM

BAR IS ONE INCH ON OFFICIAL DRAWINGS. 0 1" IF NOT ONE INCH, ADJUST SCALE ACCORDINGLY.

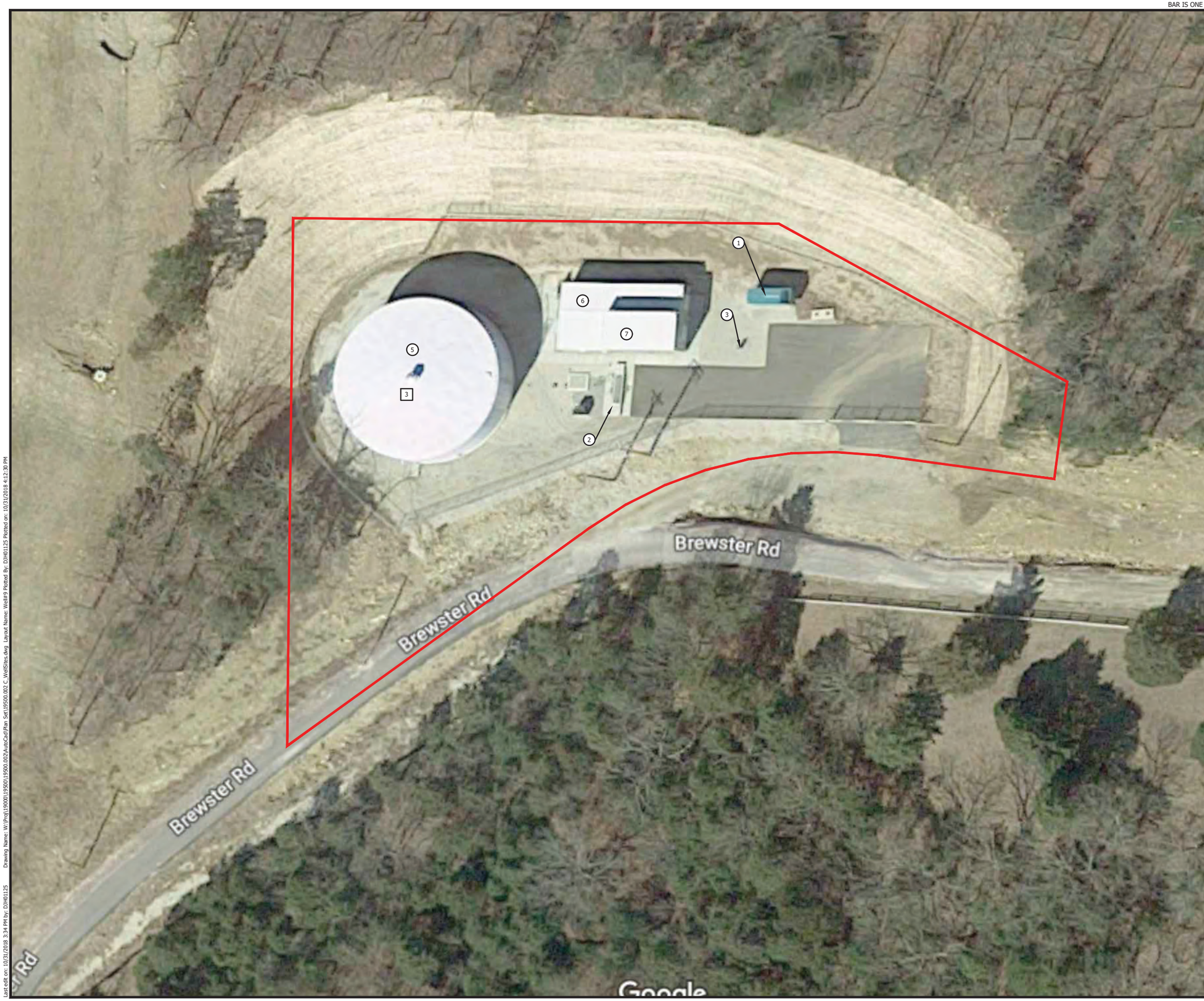


## GENERAL NOTES

### EXISTING FACILITIES

1. GENERATOR
2. SALT BRINE TANK
3. WELL
4. HVAC- EQUIPMENT
5. TANK
6. BOOSTER STATION
7. TREATMENT BUILDING
8. CHLORINE CONTACT PIPING

### PROPOSED FACILITIES

1. TREATMENT BUILDING
2. WETWELL / AERATOR / BOOSTER
3. AERATION IN-TANK

| # | DATE | DESCRIPTION | BY |
|---|---|---|---|


Bartlett&West
1200 SW EXECUTIVE DRIVE - TOPEKA KS 66615.3850
PHONE 785.272.2252 - FAX 785.273.8735
www.bartlettwest.com


# WELL#9 (ARBORS) EXISTING SITE PLAN

TO#2: RO TREATMENT EVALUATION
CITY OF EUREKA
EUREKA, MISSOURI

PRELIMINARY

0 20' 40'
SCALE: 1" = 20'

| | |
|---|---|
| SEALED DATE: | #### |
| DESIGNED BY: | CLY |
| DRAWN BY: | CLY |
| APPROVED BY: | BLH |
| DESIGN PROJ: | 19500.002 |
| DATE: | AUG 2018 |
| DRAWING NO: | WELL #9 |
| SHEET NO: | 05 of 07 |


ALL RIGHTS RESERVED. ALL BARTLETT & WEST PLANS, SPECIFICATIONS AND DRAWINGS ARE PROTECTED UNDER COPYRIGHT LAW, AND NO PART MAY BE COPIED, REPRODUCED, DISPLAYED PUBLICLY, USED TO CREATE DERIVATIVES, DISTRIBUTED, STORED IN A RETRIEVAL SYSTEM OR TRANSMITTED IN ANY FORM BY ANY MEANS WITHOUT PRIOR WRITTEN PERMISSION OF BARTLETT & WEST.



Last edit on: 10/31/2018 3:34 PM by: DJH01125 Drawing Name: W:\Proj\19500\19500\19500.002\AutoCad\Plan Set\19500.002 C-WellSites.dwg Layout Name: Well#9 Plotted By: DJH01125 Plotted on: 10/31/2018 4:12:30 PM

BAR IS ONE INCH ON OFFICIAL DRAWINGS. 0 1" IF NOT ONE INCH, ADJUST SCALE ACCORDINGLY.

## GENERAL NOTES

### EXISTING FACILITIES

1. GENERATOR
2. SALT BRINE TANK
3. WELL
4. HVAC- EQUIPMENT
5. TANK
6. BOOSTER STATION
7. TREATMENT BUILDING
8. CHLORINE CONTACT PIPING

### PROPOSED FACILITIES

1. TREATMENT BUILDING
2. WETWELL / AERATOR / BOOSTER
3. AERATION IN-TANK

| # | DATE | DESCRIPTION | BY |
|---|---|---|---|


Bartlett&West
1200 SW EXECUTIVE DRIVE - TOPEKA KS 66615.3850
PHONE 785.272.2252 - FAX 785.273.8735
www.bartlettwest.com


# WELL#10 (ASHTON) EXISTING SITE PLAN

TO#2: RO TREATMENT EVALUATION
CITY OF EUREKA
EUREKA, MISSOURI

PRELIMINARY

0 20' 40'
SCALE: 1" = 20'

| | |
|---|---|
| SEALED DATE: | #### |
| DESIGNED BY: | CLY |
| DRAWN BY: | CLY |
| APPROVED BY: | BLH |
| DESIGN PROJ: | 19500.002 |
| DATE: | AUG 2018 |
| DRAWING NO: | WELL #10 |
| SHEET NO: | 06 of 07 |


ALL RIGHTS RESERVED. ALL BARTLETT & WEST PLANS, SPECIFICATIONS AND DRAWINGS ARE PROTECTED UNDER COPYRIGHT LAW, AND NO PART MAY BE COPIED, REPRODUCED, DISPLAYED PUBLICLY, USED TO CREATE DERIVATIVES, DISTRIBUTED, STORED IN A RETRIEVAL SYSTEM OR TRANSMITTED IN ANY FORM BY ANY MEANS WITHOUT PRIOR WRITTEN PERMISSION OF BARTLETT & WEST.



Last edit on: 10/31/2018 3:34 PM by: DJH01125 Drawing Name: W:\Proj\19000\19500\19500.002\AutoCad\Plan Set\19500.002 C-WellSites.dwg Layout Name: Well#10 Plotted By: DJH01125 Plotted on: 10/31/2018 4:13:23 PM

# APPENDIX G

# Construction Cost Estimates

# CITY OF EUREKA
# RO TREATMENT EVALUATION

## ENGINEER'S OPINION OF PROBABLE COST - SUMMARY

| ITEM NO. | ITEM DESCRIPTION | WELL NO. 1 | WELL NO. 5 | WELL NO. 6 | WELL NO. 8 | WELL NO. 9 | WELL NO. 10 | TOTAL |
|---|---|---|---|---|---|---|---|---|
| | | | | | | | | |
| 1 | BONDS, MOBILIZATION, SUBMITTALS, START-UP, O&M MANUALS, EROSION CONTROL | $ 30,000 | $ 30,000 | $ 38,000 | $ 27,500 | $ 14,000 | $ 30,000 | $ 169,500 |
| 2 | DEMOLITION, & REMOVALS | $ 27,000 | $ 27,000 | $ - | $ 27,000 | $ - | $ 27,000 | $ 108,000 |
| 3 | CONCRETE | $ 72,000 | $ 80,000 | $ 45,000 | $ - | $ 5,000 | $ 72,000 | $ 274,000 |
| 4 | MISC STEEL FRAMING & SUPPORTS | $ 5,000 | $ 5,000 | $ 5,000 | $ 5,000 | $ - | $ 5,000 | $ 25,000 |
| 5 | NEW BUILDING WALLS | --- | --- | $ 81,000 | --- | $ 9,000 | --- | $ 90,000 |
| 6 | NEW BUILDING ROOF, INSULATION, GUTTERS, CAULK | --- | --- | $ 42,000 | --- | $ 3,000 | --- | $ 45,000 |
| 7 | DOORS AND WINDOWS | $ 3,500 | $ 3,500 | $ 5,000 | $ 3,500 | $ 1,000 | $ 3,500 | $ 20,000 |
| 8 | PAINTING & COATING | $ 8,000 | $ 8,000 | $ 20,000 | $ 8,000 | $ - | $ 8,000 | $ 52,000 |
| 9 | PLUMBING | --- | --- | $ 11,000 | --- | $ - | --- | $ 11,000 |
| 10 | HEAT & VENTILATION | --- | --- | $ 27,000 | --- | $ 8,000 | --- | $ 35,000 |
| 11 | ELECTRICAL PANELS, CONDUIT, WIRE | $ 208,000 | $ 180,000 | $ 202,000 | $ 207,000 | $ 8,000 | $ 171,000 | $ 976,000 |
| 12 | NEW GENERATOR | $ - | $ - | $ 172,000 | $ 209,000 | $ - | $ 78,000 | $ 459,000 |
| 13 | RELOCATED GENERATOR | $ 15,000 | $ 15,000 | $ - | $ - | $ - | $ - | $ 30,000 |
| 14 | EXCAVATION, FENCING, SEEDING, ASPHALT/GRAVEL | $ 10,000 | $ 9,500 | $ 5,000 | $ - | $ 2,000 | $ 10,000 | $ 36,500 |
| 15 | SITE PIPING, TRENCHING, BACKFILL, VALVES | $ 10,000 | $ 10,000 | $ 25,000 | $ - | $ 2,500 | $ 20,000 | $ 67,500 |
| 16 | INTERIOR PROCESS PIPING, VALVES, METERS & APPURTENANCES | $ 50,000 | $ 50,000 | $ 50,000 | $ 50,000 | $ - | $ 50,000 | $ 250,000 |
| 17 | RO SYSTEM, INSTALLATION, 1/5 OF CIP TRAILER | $ 471,000 | $ 471,000 | $ 336,000 | $ 391,000 | $ - | $ 446,000 | $ 2,115,000 |
| 18 | WELL PUMP CHANGE OUT | $ - | $ - | $ 30,000 | $ 30,000 | $ - | $ - | $ 60,000 |
| 19 | PRE-MANUFACTURED FINISHED WATER BOOSTER STATION | $ 296,000 | $ 364,000 | $ - | $ - | $ - | $ 296,000 | $ 956,000 |
| 20 | AERATION SYSTEM | $ 50,000 | $ 50,000 | $ 93,000 | $ 93,000 | $ 93,000 | $ 50,000 | $ 429,000 |
| 21 | CAUSTIC SODA FEED SYSTEM, BULK TANK, SCALE, DAY TANK | $ 10,000 | $ 10,000 | $ 10,000 | $ 10,000 | $ 10,000 | $ 10,000 | $ 60,000 |
| 22 | INSTRUMENTATION , FIELD DEVICES, CONDUITS & WIRE | $ 20,000 | $ 20,000 | $ 20,000 | $ 20,000 | $ 5,000 | $ 20,000 | $ 105,000 |
| | | | | | | | | $ - |
| | SUBTOTAL TOTAL ESTIMATED COST OF CONSTRUCTION | $ 1,285,500 | $ 1,333,000 | $ 1,217,000 | $ 1,081,000 | $ 160,500 | $ 1,296,500 | $ 6,373,500 |
| | UNACCOUNTED FOR COSTS (15%) | $ 193,000 | $ 200,000 | $ 183,000 | $ 162,000 | $ 24,000 | $ 194,000 | $ 956,000 |
| | **TOTAL ESTIMATED COST OF CONSTRUCTION** | **$ 1,478,500** | **$ 1,533,000** | **$ 1,400,000** | **$ 1,243,000** | **$ 184,500** | **$ 1,490,500** | **$ 7,329,500** |
| | | | | | | | | |
| | LAND | $ 15,000 | --- | --- | --- | --- | --- | $ 15,000 |
| | PILOT STUDY, DESIGN ENG, CONST ENG, CONSTRUCT OBSERVE, LEGAL, FUNDING, MISC (30%) | $ 444,000 | $ 460,000 | $ 420,000 | $ 373,000 | $ 55,000 | $ 447,000 | $ 2,199,000 |
| | **SUBTOTAL** | **$ 1,937,500** | **$ 1,993,000** | **$ 1,820,000** | **$ 1,616,000** | **$ 239,500** | **$ 1,937,500** | **$ 9,543,500** |
| | OVERALL CONTINGENCY (10%) | $ 194,000 | $ 199,000 | $ 182,000 | $ 162,000 | $ 24,000 | $ 194,000 | $ 954,000 |
| | **PROJECT TOTAL** | **$ 2,131,500** | **$ 2,192,000** | **$ 2,002,000** | **$ 1,778,000** | **$ 263,500** | **$ 2,131,500** | **$ 10,497,500** |

| | |
|---|---|
| LOAN PERIOD (YRS) | 20 |
| % INTEREST | 3.0 |
| ANNUAL PAYMENT | $ 705,597 |
| ANNUAL WATER PRODUCTION | 628,000,000 |
| $/1000 | 1.12 |

# CITY OF EUREKA
# RO TREATMENT EVALUATION

## ENGINEER'S OPINION OF PROBABLE COST - WELL NO. 1

| ITEM NO. | ITEM DESCRIPTION | UNIT | QTY | $/QTY | TOTAL |
|---|---|---|---|---|---|
| | | | | | |
| | MOBILIZATION, BONDS, INSURANCE, PERMITS, INCIDENTAL WORK | LS | 1 | | $ 15,000 |
| | SUBMITTALS, CONST STAKING, TEMP SITE FACILITIES | LS | 1 | | $ 7,500 |
| | EROSION & SEDIMENT CONTROL | LS | 1 | | $ 2,500 |
| | START-UP, OPERATION & MAINTENANCE DATA, TRAINING, CLOSEOUT | LS | 1 | | $ 5,000 |
| | | | | | |
| | DEMOLITION, & REMOVALS | | | | |
| | IX EQUIPMENT | LS | 1 | | $ 20,000 |
| | BLOCK OUT WALL | LS | 1 | | $ 2,000 |
| | INTERIOR PIPE & VALVES | LS | 1 | | $ 5,000 |
| | | | | | |
| | CONCRETE | | | | |
| | WETWELL | CU YD | 90 | $ 800 | $ 72,000 |
| | BUILDING FOUNDATION AND FLOOR | CU YD | | $ 600 | $ - |
| | | | | | |
| | MISC STEEL FRAMING & SUPPORTS | LS | 1 | | $ 5,000 |
| | | | | | |
| | BRICK MASONRY - EXTERIOR VENEER | SQ FT | | $ 20 | $ - |
| | CONCRETE UNIT MASONRY | SQ FT | | $ 10 | $ - |
| | | | | | |
| | WOOD ROOF TRUSSES & SHEATHING | SQ FT | | $ 10 | $ - |
| | INSULATION | SQ FT | | $ 5 | $ - |
| | SHINGLE ROOFING SYSTEM | SQ FT | | $ 8 | $ - |
| | SHEET METAL FLASHING, GUTTERS, & DOWNSPOUTS | LS | | $ 2,000 | $ - |
| | ARCHITECTURAL CAULKING & SEALANTS | LS | | $ 1,000 | $ - |
| | | | | | |
| | OH DOOR, FRAME, & HARDWARE | EA | 1 | $ 3,500 | $ 3,500 |
| | | | | | |
| | PAINTING & COATING | LS | 1 | | $ 8,000 |
| | | | | | |
| | PLUMBING, FIXTURES | LS | 1 | | |
| | | | | | |
| | HVAC EQUIPMENT, DUCTS, PIPING, & SUPPORTS | LS | 1 | | |
| | | | | | |
| | ELECTICAL PANELS, CONDUIT, WIRE | LS | 1 | | $ 208,000 |
| | NEW GENERATOR | LS | | | |
| | RELOCATED GENERATOR | LS | 1 | | $ 15,000 |
| | | | | | |
| | SITE: EXCAVATION, BACKFILLING, & COMPACTING | CU YD | 200 | $ 15 | $ 3,000 |
| | FENCES & GATES | FT | 130 | $ 25 | $ 3,250 |
| | SODDING/SEEDING | LS | 1 | | $ 1,750 |
| | PAVING, GRAVEL PARKING | LS | 1 | | $ 2,000 |
| | | | | | |
| | SITE PIPING, TRENCHING, BACKFILL, VALVES | FT | 100 | $ 100 | $ 10,000 |
| | | | | | |
| | INTERIOR PROCESS PIPING, VALVES, METERS & APPURTENANCES | LS | 1 | | $ 50,000 |
| | | | | | |
| | RO SYSTEM (16:8 ARRAY), FEED PUMP, ANTISCALENT FEED SYSTEM | LS | 1 | | $ 411,000 |
| | RO SYSTEM, INSTALLATION | LS | 1 | | $ 40,000 |
| | 1/5 COST OF CIP SYSTEM & TRAILER | LS | 1 | | $ 20,000 |
| | | | | | |
| | WELL PUMP CHANGE OUT | LS | | | |
| | | | | | |

| | | | | | |
|---|---|---|---|---|---|
| | PRE-MANUF FINSIEHD WATER BOOSTER STATION | LS | 1 | | $ 286,000 |
| | INSTALLATION | LS | 1 | | $ 10,000 |
| | | | | | |
| | AERATION SYSTEM | | | | |
| | IN-TANK | LS | 0 | $ 93,000 | $ - |
| | INDUCED DRAFT | LS | 1 | $ 50,000 | $ 50,000 |
| | | | | | |
| | CAUSTIC SODA FEED SYSTEM, BULK TANK, SCALE, DAY TANK | LS | 1 | $ 10,000 | $ 10,000 |
| | | | | | |
| | INSTRUMENTATION , FIELD DEVICES, CONDUT & WIRE | LS | 1 | | $ 20,000 |
| | | | | | |
| | **TOTAL ESTIMATED COST OF CONSTRUCTION** | | | | **$1,285,500** |

# CITY OF EUREKA
# RO TREATMENT EVALUATION

## ENGINEER'S OPINION OF PROBABLE COST - WELL NO. 5

| ITEM NO. | ITEM DESCRIPTION | UNIT | QTY | $/QTY | TOTAL |
|---|---|---|---|---|---|
| | | | | | |
| | MOBILIZATION, BONDS, INSURANCE, PERMITS, INCIDENTAL WORK | LS | 1 | | $ 15,000 |
| | SUBMITTALS, CONST STAKING, TEMP SITE FACILITIES | LS | 1 | | $ 7,500 |
| | EROSION & SEDIMENT CONTROL | LS | 1 | | $ 2,500 |
| | START-UP, OPERATION & MAINTENANCE DATA, TRAINING, CLOSEOUT | LS | 1 | | $ 5,000 |
| | | | | | |
| | DEMOLITION, & REMOVALS | | | | |
| | IX EQUIPMENT | LS | 1 | | $ 20,000 |
| | BLOCK OUT WALL | LS | 1 | | $ 2,000 |
| | INTERIOR PIPE & VALVES | LS | 1 | | $ 5,000 |
| | | | | | |
| | CONCRETE | | | | |
| | WETWELL | CU YD | 100 | $ 800 | $ 80,000 |
| | BUILDING FOUNDATION AND FLOOR | CU YD | | $ 600 | $ - |
| | | | | | |
| | MISC STEEL FRAMING & SUPPORTS | LS | 1 | | $ 5,000 |
| | | | | | |
| | BRICK MASONRY - EXTERIOR VENEER | SQ FT | | $ 20 | $ - |
| | CONCRETE UNIT MASONRY | SQ FT | | $ 10 | $ - |
| | | | | | |
| | WOOD ROOF TRUSSES & SHEATHING | SQ FT | | $ 10 | $ - |
| | INSULATION | SQ FT | | $ 5 | $ - |
| | SHINGLE ROOFING SYSTEM | SQ FT | | $ 8 | $ - |
| | SHEET METAL FLASHING, GUTTERS, & DOWNSPOUTS | LS | | $ 2,000 | $ - |
| | ARCHITECTURAL CAULKING & SEALANTS | LS | | $ 1,000 | $ - |
| | | | | | |
| | OH DOOR, FRAME, & HARDWARE | EA | 1 | $ 3,500 | $ 3,500 |
| | | | | | |
| | PAINTING & COATING | LS | 1 | | $ 8,000 |
| | | | | | |
| | PLUMBING, FIXTURES | LS | 1 | | |
| | | | | | |
| | HVAC EQUIPMENT, DUCTS, PIPING, & SUPPORTS | LS | 1 | | |
| | | | | | |
| | ELECTICAL PANELS, CONDUIT, WIRE | LS | 1 | | $ 180,000 |
| | NEW GENERATOR | LS | | | |
| | RELOCATED GENERATOR | LS | 1 | | $ 15,000 |
| | | | | | |
| | SITE: EXCAVATION, BACKFILLING, & COMPACTING | CU YD | 200 | $ 15 | $ 3,000 |
| | FENCES & GATES | FT | 110 | $ 25 | $ 2,750 |
| | SODDING/SEEDING | LS | 1 | | $ 1,750 |
| | PAVING, GRAVEL PARKING | LS | 1 | | $ 2,000 |
| | | | | | |
| | SITE PIPING, TRENCHING, BACKFILL, VALVES | FT | 100 | $ 100 | $ 10,000 |
| | | | | | |
| | INTERIOR PROCESS PIPING, VALVES, METERS & APPURTENANCES | LS | 1 | | $ 50,000 |
| | | | | | |
| | RO SYSTEM (16:8 ARRAY), FEED PUMP, ANTISCALENT FEED SYSTEM | LS | 1 | | $ 411,000 |
| | RO SYSTEM, INSTALLATION | LS | 1 | | $ 40,000 |
| | 1/5 COST OF CIP SYSTEM & TRAILER | LS | 1 | | $ 20,000 |
| | | | | | |
| | WELL PUMP CHANGE OUT | LS | | | |
| | | | | | |

| | | | | | |
|---|---|---|---|---|---|
| | PRE-MANUF FINSIEHD WATER BOOSTER STATION | LS | 1 | | $ 354,000 |
| | INSTALLATION | LS | 1 | | $ 10,000 |
| | | | | | |
| | AERATION SYSTEM | | | | |
| | IN-TANK | LS | 0 | $ 93,000 | $ - |
| | INDUCED DRAFT | LS | 1 | $ 50,000 | $ 50,000 |
| | | | | | |
| | CAUSTIC SODA FEED SYSTEM, BULK TANK, SCALE, DAY TANK | LS | 1 | $ 10,000 | $ 10,000 |
| | | | | | |
| | INSTRUMENTATION , FIELD DEVICES, CONDUT & WIRE | LS | 1 | | $ 20,000 |
| | | | | | |
| | **TOTAL ESTIMATED COST OF CONSTRUCTION** | | | | **$1,333,000** |

# CITY OF EUREKA
# RO TREATMENT EVALUATION

## ENGINEER'S OPINION OF PROBABLE COST - WELL NO. 6

| ITEM NO. | ITEM DESCRIPTION | UNIT | QTY | $/QTY | TOTAL |
|---|---|---|---|---|---|
| | | | | | |
| | MOBILIZATION, BONDS, INSURANCE, PERMITS, INCIDENTAL WORK | LS | 1 | | $ 20,000 |
| | SUBMITTALS, CONST STAKING, TEMP SITE FACILITIES | LS | 1 | | $ 10,000 |
| | EROSION & SEDIMENT CONTROL | LS | 1 | | $ 3,000 |
| | START-UP, OPERATION & MAINTENANCE DATA, TRAINING, CLOSEOUT | LS | 1 | | $ 5,000 |
| | | | | | |
| | DEMOLITION, & REMOVALS | | | | |
| | IX EQUIPMENT | LS | 1 | | |
| | BLOCK OUT WALL | LS | 1 | | |
| | INTERIOR PIPE & VALVES | LS | 1 | | |
| | | | | | |
| | CONCRETE | | | | |
| | WETWELL | CU YD | | $ 800 | $ - |
| | BUILDING FOUNDATION AND FLOOR | CU YD | 75 | $ 600 | $ 45,000 |
| | | | | | |
| | MISC STEEL FRAMING & SUPPORTS | LS | 1 | | $ 5,000 |
| | | | | | |
| | BRICK MASONRY - EXTERIOR VENEER | SQ FT | 1875 | $ 25 | $ 46,875 |
| | CONCRETE UNIT MASONRY | SQ FT | 1875 | $ 15 | $ 28,125 |
| | INTERIOR WALLS | SQ FT | 392 | $ 15 | $ 5,880 |
| | | | | | |
| | WOOD ROOF TRUSSES & SHEATHING | SQ FT | 1120 | $ 15 | $ 16,800 |
| | INSULATION | SQ FT | 1120 | $ 10 | $ 11,200 |
| | SHINGLE ROOFING SYSTEM | SQ FT | 1120 | $ 10 | $ 11,200 |
| | SHEET METAL FLASHING, GUTTERS, & DOWNSPOUTS | LS | 1 | $ 2,000 | $ 2,000 |
| | ARCHITECTURAL CAULKING & SEALANTS | LS | 1 | $ 1,000 | $ 1,000 |
| | | | | | |
| | OH DOOR, FRAME, & HARDWARE | EA | 1 | $ 5,000 | $ 5,000 |
| | | | | | |
| | PAINTING & COATING | LS | 1 | | $ 20,000 |
| | | | | | |
| | PLUMBING, FIXTURES | LS | 1 | | $ 11,000 |
| | | | | | |
| | HVAC EQUIPMENT, DUCTS, PIPING, & SUPPORTS | LS | 1 | | $ 27,000 |
| | | | | | |
| | ELECTICAL PANELS, CONDUIT, WIRE | LS | 1 | | $ 202,000 |
| | NEW GENERATOR | LS | 1 | | $ 172,000 |
| | RELOCATED GENERATOR | LS | | | $ - |
| | | | | | |
| | SITE: EXCAVATION, BACKFILLING, & COMPACTING | CU YD | 100 | $ 15 | $ 1,500 |
| | FENCES & GATES | FT | 0 | $ 25 | $ - |
| | SODDING/SEEDING | LS | 1 | | $ 1,750 |
| | PAVING, GRAVEL PARKING | LS | 1 | | $ 2,000 |
| | | | | | |
| | SITE PIPING, TRENCHING, BACKFILL, VALVES, RELOCATION | FT | 250 | $ 100 | $ 25,000 |
| | | | | | |
| | INTERIOR PROCESS PIPING, VALVES, METERS & APPURTENANCES | LS | 1 | | $ 50,000 |
| | | | | | |
| | RO SYSTEM (10:5 ARRAY), FEED PUMP, ANTISCALENT FEED SYSTEM | LS | 1 | | $ 276,000 |
| | RO SYSTEM, INSTALLATION | LS | 1 | | $ 40,000 |
| | 1/5 COST OF CIP SYSTEM & TRAILER | LS | 1 | | $ 20,000 |
| | | | | | |
| | WELL PUMP CHANGE OUT | LS | | | *$ 30,000* |

| | | | | | |
|---|---|---|---|---|---|
| | | | | | |
| | PRE-MANUF FINSIEHD WATER BOOSTER STATION | LS | 1 | | |
| | INSTALLATION | LS | 1 | | |
| | | | | | |
| | AERATION SYSTEM | | | | |
| | IN-TANK | LS | 1 | $ 93,000 | $ 93,000 |
| | INDUCED DRAFT | LS | 0 | $ 50,000 | $ - |
| | | | | | |
| | CAUSTIC SODA FEED SYSTEM, BULK TANK, SCALE, DAY TANK | LS | 1 | $ 10,000 | $ 10,000 |
| | | | | | |
| | INSTRUMENTATION , FIELD DEVICES, CONDUT & WIRE | LS | 1 | | $ 20,000 |
| | | | | | |
| | **TOTAL ESTIMATED COST OF CONSTRUCTION** | | | | **$1,217,330** |

# CITY OF EUREKA
# RO TREATMENT EVALUATION

## ENGINEER'S OPINION OF PROBABLE COST - WELL NO. 8

| ITEM NO. | ITEM DESCRIPTION | UNIT | QTY | $/QTY | TOTAL |
|---|---|---|---|---|---|
| | | | | | |
| | MOBILIZATION, BONDS, INSURANCE, PERMITS, INCIDENTAL WORK | LS | 1 | | $ 15,000 |
| | SUBMITTALS, CONST STAKING, TEMP SITE FACILITIES | LS | 1 | | $ 7,500 |
| | EROSION & SEDIMENT CONTROL | LS | 1 | | $ - |
| | START-UP, OPERATION & MAINTENANCE DATA, TRAINING, CLOSEOUT | LS | 1 | | $ 5,000 |
| | | | | | |
| | DEMOLITION, & REMOVALS | | | | |
| | IX EQUIPMENT | LS | 1 | | $ 20,000 |
| | BLOCK OUT WALL | LS | 1 | | $ 2,000 |
| | INTERIOR PIPE & VALVES | LS | 1 | | $ 5,000 |
| | | | | | |
| | CONCRETE | | | | |
| | WETWELL | CU YD | | $ 800 | $ - |
| | BUILDING FOUNDATION AND FLOOR | CU YD | | $ 600 | $ - |
| | | | | | |
| | MISC STEEL FRAMING & SUPPORTS | LS | 1 | | $ 5,000 |
| | | | | | |
| | BRICK MASONRY - EXTERIOR VENEER | SQ FT | | $ 20 | $ - |
| | CONCRETE UNIT MASONRY | SQ FT | | $ 10 | $ - |
| | INTERIOR WALLS | SQ FT | | $ 10 | $ - |
| | | | | | |
| | WOOD ROOF TRUSSES & SHEATHING | SQ FT | | $ 10 | $ - |
| | INSULATION | SQ FT | | $ 5 | $ - |
| | SHINGLE ROOFING SYSTEM | SQ FT | | $ 8 | $ - |
| | SHEET METAL FLASHING, GUTTERS, & DOWNSPOUTS | LS | | $ 2,000 | $ - |
| | ARCHITECTURAL CAULKING & SEALANTS | LS | | $ 1,000 | $ - |
| | | | | | |
| | OH DOOR, FRAME, & HARDWARE | EA | 1 | $ 3,500 | $ 3,500 |
| | | | | . | |
| | PAINTING & COATING | LS | 1 | | $ 8,000 |
| | | | | | |
| | PLUMBING, FIXTURES | LS | 1 | | |
| | | | | | |
| | HVAC EQUIPMENT, DUCTS, PIPING, & SUPPORTS | LS | 1 | | |
| | | | | | |
| | ELECTICAL PANELS, CONDUIT, WIRE | LS | 1 | | $ 207,000 |
| | NEW GENERATOR | LS | 1 | | $ 209,000 |
| | RELOCATED GENERATOR | LS | | | $ - |
| | | | | | |
| | SITE: EXCAVATION, BACKFILLING, & COMPACTING | CU YD | 0 | $ 15 | $ - |
| | FENCES & GATES | FT | 0 | $ 25 | $ - |
| | SODDING/SEEDING | LS | 0 | | $ - |
| | PAVING, GRAVEL PARKING | LS | 0 | | $ - |
| | | | | | |
| | SITE PIPING, TRENCHING, BACKFILL, VALVES | FT | 0 | $ 100 | $ - |
| | | | | | |
| | INTERIOR PROCESS PIPING, VALVES, METERS & APPURTENANCES | LS | 1 | | $ 50,000 |
| | | | | | |
| | RO SYSTEM (12:6 ARRAY), FEED PUMP, ANTISCALENT FEED SYSTEM | LS | 1 | | $ 331,000 |
| | RO SYSTEM, INSTALLATION | LS | 1 | | $ 40,000 |
| | 1/5 COST OF CIP SYSTEM & TRAILER | LS | 1 | | $ 20,000 |
| | | | | | |
| | WELL PUMP CHANGE OUT | LS | | | *$ 30,000* |

| | | | | | |
|---|---|---|---|---|---|
| | | | | | |
| | PRE-MANUF FINSIEHD WATER BOOSTER STATION | LS | 1 | | |
| | INSTALLATION | LS | 1 | | |
| | | | | | |
| | AERATION SYSTEM | | | | |
| | IN-TANK | LS | 1 | $ 93,000 | $ 93,000 |
| | INDUCED DRAFT | LS | 0 | $ 50,000 | $ - |
| | | | | | |
| | CAUSTIC SODA FEED SYSTEM, BULK TANK, SCALE, DAY TANK | LS | 1 | $ 10,000 | $ 10,000 |
| | | | | | |
| | INSTRUMENTATION , FIELD DEVICES, CONDUT & WIRE | LS | 1 | | $ 20,000 |
| | | | | | |
| | **TOTAL ESTIMATED COST OF CONSTRUCTION** | | | | **$1,081,000** |

# CITY OF EUREKA
# RO TREATMENT EVALUATION

## ENGINEER'S OPINION OF PROBABLE COST - WELL NO. 9

| ITEM NO. | ITEM DESCRIPTION | UNIT | QTY | $/QTY | TOTAL |
|---|---|---|---|---|---|
| | | | | | |
| | MOBILIZATION, BONDS, INSURANCE, PERMITS, INCIDENTAL WORK | LS | 1 | | $ 7,500 |
| | SUBMITTALS, CONST STAKING, TEMP SITE FACILITIES | LS | 1 | | $ 4,000 |
| | EROSION & SEDIMENT CONTROL | LS | 1 | | |
| | START-UP, OPERATION & MAINTENANCE DATA, TRAINING, CLOSEOUT | LS | 1 | | $ 2,500 |
| | | | | | |
| | DEMOLITION, & REMOVALS | | | | |
| | IX EQUIPMENT | LS | 1 | | |
| | BLOCK OUT WALL | LS | 1 | | |
| | INTERIOR PIPE & VALVES | LS | 1 | | |
| | | | | | |
| | CONCRETE | | | | |
| | WETWELL | CU YD | | $ 800 | $ - |
| | BUILDING FOUNDATION AND FLOOR | CU YD | 8 | $ 600 | $ 4,800 |
| | | | | | |
| | MISC STEEL FRAMING & SUPPORTS | LS | 1 | | |
| | | | | | |
| | WALLS, INSULATION | SQ FT | 360 | $ 25 | $ 9,000 |
| | | | | | |
| | | | | | |
| | | | | | |
| | WOOD ROOF TRUSSES & SHEATHING | SQ FT | 80 | $ 10 | $ 800 |
| | INSULATION | SQ FT | 80 | $ 5 | $ 400 |
| | SHINGLE ROOFING SYSTEM | SQ FT | 80 | $ 8 | $ 640 |
| | SHEET METAL FLASHING, GUTTERS, & DOWNSPOUTS | LS | 1 | $ 1,000 | $ 1,000 |
| | ARCHITECTURAL CAULKING & SEALANTS | LS | 1 | $ 500 | $ 500 |
| | | | | | |
| | DOOR, FRAME, & HARDWARE | EA | 1 | $ 1,000 | $ 1,000 |
| | | | | | |
| | PAINTING & COATING | LS | 1 | | |
| | | | | | |
| | PLUMBING, FIXTURES | LS | 1 | | |
| | | | | | |
| | HVAC EQUIPMENT, DUCTS, PIPING, & SUPPORTS | LS | 1 | | $ 8,000 |
| | | | | | |
| | ELECTICAL PANELS, CONDUIT, WIRE | LS | 1 | | $ 8,000 |
| | NEW GENERATOR | LS | 1 | | |
| | RELOCATED GENERATOR | LS | | | $ - |
| | | | | | |
| | SITE: EXCAVATION, BACKFILLING, & COMPACTING | CU YD | 50 | $ 15 | $ 750 |
| | FENCES & GATES | FT | 0 | $ 25 | $ - |
| | SODDING/SEEDING | LS | 1 | | $ - |
| | PAVING, GRAVEL PARKING | LS | 1 | | $ 1,000 |
| | | | | | |
| | SITE PIPING, TRENCHING, BACKFILL, VALVES, RELOCATION | FT | 50 | $ 50 | $ 2,500 |
| | | | | | |
| | INTERIOR PROCESS PIPING, VALVES, METERS & APPURTENANCES | LS | 1 | | |
| | | | | | |
| | RO SYSTEM (10:5 ARRAY), FEED PUMP, ANTISCALENT FEED SYSTEM | LS | 1 | | |
| | RO SYSTEM, INSTALLATION | LS | 1 | | |
| | 1/5 COST OF CIP SYSTEM & TRAILER | LS | 1 | | |
| | | | | | |
| | WELL PUMP CHANGE OUT | LS | | | |

| | | | | | |
|---|---|---|---|---|---|
| | | | | | |
| | PRE-MANUF FINSIEHD WATER BOOSTER STATION | LS | 1 | | |
| | INSTALLATION | LS | 1 | | |
| | | | | | |
| | AERATION SYSTEM | | | | |
| | IN-TANK | LS | 1 | $ 93,000 | $ 93,000 |
| | INDUCED DRAFT | LS | 0 | $ 50,000 | $ - |
| | | | | | |
| | CAUSTIC SODA FEED SYSTEM, BULK TANK, SCALE, DAY TANK | LS | 1 | $ 10,000 | $ 10,000 |
| | | | | | |
| | INSTRUMENTATION , FIELD DEVICES, CONDUT & WIRE | LS | 1 | | $ 5,000 |
| | | | | | |
| | **TOTAL ESTIMATED COST OF CONSTRUCTION** | | | | **$ 160,390** |

# CITY OF EUREKA
# RO TREATMENT EVALUATION

## ENGINEER'S OPINION OF PROBABLE COST - WELL NO. 10

| ITEM NO. | ITEM DESCRIPTION | UNIT | QTY | $/QTY | TOTAL |
|---|---|---|---|---|---|
| | | | | | |
| | MOBILIZATION, BONDS, INSURANCE, PERMITS, INCIDENTAL WORK | LS | 1 | | $ 15,000 |
| | SUBMITTALS, CONST STAKING, TEMP SITE FACILITIES | LS | 1 | | $ 7,500 |
| | EROSION & SEDIMENT CONTROL | LS | 1 | | $ 2,500 |
| | START-UP, OPERATION & MAINTENANCE DATA, TRAINING, CLOSEOUT | LS | 1 | | $ 5,000 |
| | | | | | |
| | DEMOLITION, & REMOVALS | | | | |
| | IX EQUIPMENT | LS | 1 | | $ 20,000 |
| | BLOCK OUT WALL | LS | 1 | | $ 2,000 |
| | INTERIOR PIPE & VALVES | LS | 1 | | $ 5,000 |
| | | | | | |
| | CONCRETE | | | | |
| | WETWELL | CU YD | 90 | $ 800 | $ 72,000 |
| | BUILDING FOUNDATION AND FLOOR | CU YD | | $ 600 | $ - |
| | | | | | |
| | MISC STEEL FRAMING & SUPPORTS | LS | 1 | | $ 5,000 |
| | | | | | |
| | BRICK MASONRY - EXTERIOR VENEER | SQ FT | | $ 20 | $ - |
| | CONCRETE UNIT MASONRY | SQ FT | | $ 10 | $ - |
| | | | | | |
| | WOOD ROOF TRUSSES & SHEATHING | SQ FT | | $ 10 | $ - |
| | INSULATION | SQ FT | | $ 5 | $ - |
| | SHINGLE ROOFING SYSTEM | SQ FT | | $ 8 | $ - |
| | SHEET METAL FLASHING, GUTTERS, & DOWNSPOUTS | LS | | $ 2,000 | $ - |
| | ARCHITECTURAL CAULKING & SEALANTS | LS | | $ 1,000 | $ - |
| | | | | | |
| | OH DOOR, FRAME, & HARDWARE | EA | 1 | $ 3,500 | $ 3,500 |
| | | | | | |
| | PAINTING & COATING | LS | 1 | | $ 8,000 |
| | | | | | |
| | PLUMBING, FIXTURES | LS | 1 | | |
| | | | | | |
| | HVAC EQUIPMENT, DUCTS, PIPING, & SUPPORTS | LS | 1 | | |
| | | | | | |
| | ELECTICAL PANELS, CONDUIT, WIRE | LS | 1 | | $ 171,000 |
| | NEW GENERATOR | LS | 1 | | $ 78,000 |
| | RELOCATED GENERATOR | LS | | | |
| | | | | | |
| | SITE: EXCAVATION, BACKFILLING, & COMPACTING | CU YD | 200 | $ 15 | $ 3,000 |
| | FENCES & GATES | FT | 130 | $ 25 | $ 3,250 |
| | SODDING/SEEDING | LS | 1 | | $ 1,750 |
| | PAVING, GRAVEL PARKING | LS | 1 | | $ 2,000 |
| | | | | | |
| | SITE PIPING, TRENCHING, BACKFILL, VALVES | FT | 200 | $ 100 | $ 20,000 |
| | | | | | |
| | INTERIOR PROCESS PIPING, VALVES, METERS & APPURTENANCES | LS | 1 | | $ 50,000 |
| | | | | | |
| | RO SYSTEM (14:7 ARRAY), FEED PUMP, ANTISCALENT FEED SYSTEM | LS | 1 | | $ 386,000 |
| | RO SYSTEM, INSTALLATION | LS | 1 | | $ 40,000 |
| | 1/5 COST OF CIP SYSTEM & TRAILER | LS | 1 | | $ 20,000 |
| | | | | | |
| | WELL PUMP CHANGE OUT | LS | | | |
| | | | | | |

| | | | | | |
|---|---|---|---|---|---|
| | PRE-MANUF FINSIEHD WATER BOOSTER STATION | LS | 1 | | $ 286,000 |
| | INSTALLATION | LS | 1 | | $ 10,000 |
| | | | | | |
| | AERATION SYSTEM | | | | |
| | IN-TANK | LS | 0 | $ 93,000 | $ - |
| | INDUCED DRAFT | LS | 1 | $ 50,000 | $ 50,000 |
| | | | | | |
| | CAUSTIC SODA FEED SYSTEM, BULK TANK, SCALE, DAY TANK | LS | 1 | $ 10,000 | $ 10,000 |
| | | | | | |
| | INSTRUMENTATION , FIELD DEVICES, CONDUT & WIRE | LS | 1 | | $ 20,000 |
| | | | | | |
| | **TOTAL ESTIMATED COST OF CONSTRUCTION** | | | | **$1,296,500** |

# APPENDIX H

# O&M Cost Estimates

**CITY OF EUREKA**
**ESTIMATED ANNUAL IMPACT TO OPERATING& MAINTENANCE COSTS**

**November 6, 2018**

*All Costs in 2018 Dollars

| Impacted Budget Item | Well #1 (Howerton) | Well #5 (Drewel) | Well #6 (Legends) | Well #8 (Viola) | Well #9 Arbors | Well #10 (Ashton) | Total |
|---|---|---|---|---|---|---|---|
| | | | | | | | |
| Ave Day Production (GPD) | 394,877 | 390,748 | 362,422 | 301,241 | 53,000 | 219,458 | 1,721,745 |
| Ave Annual Water Production(GAL) | 144,130,000 | 142,623,000 | 132,284,000 | 109,953,000 | 19,345,000 | 80,102,000 | 628,437,000 |
| | | | | | | | |
| Labor | $ 26,600 | $ 26,600 | $ 26,600 | $ 26,600 | $ - | $ 26,600 | $ 133,000 |
| Aeration (In-Tank) | $ - | $ - | $ 8,843 | $ 8,843 | $ 8,843 | $ - | $ 26,529 |
| Aeration (Induced Draft) | $ 83 | $ 82 | $ - | $ - | $ - | $ 84 | $ 249 |
| Heating/Cooling: New Building | $ - | $ - | $ 3,360 | $ - | $ 240 | $ - | $ 3,600 |
| Additional Pumping Cost | $ 11,983 | $ 13,559 | $ 11,616 | $ 9,789 | $ - | $ 7,132 | $ 54,079 |
| Membrane Module Replacement Fund | $ 15,429 | $ 15,429 | $ 9,643 | $ 11,571 | $ - | $ 13,500 | $ 65,571 |
| Chemical Cleaning RO Filters | $ 1,000 | $ 1,000 | $ 1,000 | $ 1,000 | $ - | $ 1,000 | $ 5,000 |
| Cartridge Filter Replacement | $ 4,200 | $ 4,200 | $ 3,360 | $ 3,360 | $ - | $ 3,360 | $ 18,480 |
| Antiscalent Chemical | $ 14,989 | $ 16,961 | $ 14,531 | $ 12,245 | $ - | $ 8,921 | $ 67,647 |
| Caustic Soda Chemical | $ 10,668 | $ 18,096 | $ 19,582 | $ 13,951 | $ 2,045 | $ 5,929 | $ 70,271 |
| Reduction in IX Salt | $ (39,636) | $ (39,221) | $ (36,378) | $ (30,237) | $ - | $ (22,028) | $ (167,500) |
| | | | | | | | |
| **TOTAL ANNUAL COST** | $ 45,316 | $ 56,706 | $ 62,157 | $ 57,123 | $ 11,129 | $ 44,497 | $ 276,928 |
| **COST/ 1,000 GAL** | $ 0.31 | $ 0.40 | $ 0.47 | $ 0.52 | $ 0.58 | $ 0.56 | $ 0.44 |
| **TOTAL ANNUAL COST W/O LABOR** | $ 18,716 | $ 30,106 | $ 35,557 | $ 30,523 | $ 11,129 | $ 17,897 | $ 143,928 |
| **COST/ 1,000 GAL** | $ 0.13 | $ 0.21 | $ 0.27 | $ 0.28 | $ 0.58 | $ 0.22 | $ 0.23 |

**CITY OF EUREKA - WELL NO. 1**
**REVERSE OSMOSIS TREATMENT EVALUATION**
**ESTIMATED IMPACT TO O&M COSTS**

**November 6, 2018**

| GENERAL INFORMATION | | | |
|---|---|---|---|
| AVE DAY WATER PRODUCTION (GAL) | | 394,877 | |
| NET ANNUAL FINISHED WATER PRODUCTION (GAL) | | 144,130,000 | |
| FINISHED/RAW % | | 83.0% | |
| ANNUAL RAW FLOW (GAL) | | 173,650,602 | |
| BLEND RATIO (% RO FEED) | | 31.0% | |
| ANNUAL RO FEED (GAL) | | 119,818,915 | |
| ANNUAL RO BYPASS (GAL) | | 53,831,687 | |
| FINISHED WATER FLOW RATE (GPM) | | 856 | |
| HOURS OF OPERATION PER AVE DAY | | 7.7 | |
| ELECTRICAL COST ($/KW-HR) | | $ 0.0796 | |
| **DESCRIPTION** | **FACTORS** | **CURRENT ANNUAL $** | **COST / 1000 GAL DISTRUBUTED** |
| LABOR | | | |
| ADDITIONAL OPERATIONS LABOR FOR RO PLANT (STAFF) | 1 | $ 26,600 | $ 0.1846 |
| PORTION DEDICATED TO THIS PLANT (1/5) | 20% | | |
| LABOR COST (SALARY + FRINGES | $ 133,000 | | |
| AERATION (IN-TANK) | | $ 0 | $ 0.0000 |
| HORSEPOWER DRAW | 17.0 | | |
| HOURS OF OPERATION PER DAY | - | | |
| KW-HR PER YEAR | - | | |
| AERATION (INUCED DRAFT) | | $ 83 | $ 0.0006 |
| HORSEPOWER DRAW | 0.5 | | |
| HOURS OF OPERATION PER DAY | 7.7 | | |
| KW-HR PER YEAR | 1,046.74 | | |
| HEATING / AIR CONDITIONING IN NEW BLDG | | $ 0 | $ 0.0000 |
| TREATMENT BUILDING AREA (SQ FT) | - | | |
| $/YR PER SQ FT | 2.5 | | |
| ADDITIONAL PUMPING COST | | $ 11,983 | $ 0.0831 |
| ADDITIONAL PUMPING HEAD: CARTRIDGE FILTERS + RO SYSTEM (FT) | 300 | | |
| OVERALL PUMPING EFFICIENCY | 0.75 | | |
| KW-HR PER YEAR | 150,539 | | |
| MEMBRANE MODULE REPLACEMENT (RO) | | $ 15,429 | $ 0.1070 |
| COST PER MODULE | $ 750 | | |
| NUMBER OF SKIDS | 1.00 | | |
| NUMBER OF MODULES PER SKID | 144.00 | | |
| ESTIMATED LIFE OF MODULE (YR) | 7.00 | | |
| CHEMICAL CLEANING RO FILTERS | | $ 1,000 | $ 0.0069 |
| COST PER CLEANING | $ 1,000 | | |
| NUMBER OF SKIDS | 1.00 | | |
| CLEANINGS PER YEAR PER SKID (1 EVERY 12 MONTHS) | 1.00 | | |
| CARTRIDGE FILTER REPLACEMENT | | $ 4,200 | $ 0.0291 |
| FEQUENCY PER YEAR | 12 | | |
| NUMBER FILTER HOUSING | 1 | | |
| NUMBER OF FILTERS PER HOUSING | 25 | | |
| COST PER FILTER | $ 14 | | |
| ANTISCALANT (Vitec 4000) | | $ 14,989 | $ 0.1040 |
| DOSAGE (MG/L) | 3.0 | | |
| LB/YEAR | 2,998 | | |
| COST PER LB | $5.00 | | |
| CAUSTIC SODA (NaOH, 30% SOLUTION) | | $ 10,668 | $ 0.0740 |
| DOSAGE (MG/L) AS 100% | 7.0 | | |
| LB/YEAR | 8,414 | | |
| LBS NaOH / GAL SOLUTION @ 30% | 3.330 | | |
| GAL/YEAR | 2,527 | | |
| LBS SOLUTION/GALLON SOLUTION | 11.1 | | |
| COST PER LB OF SOLUTION | $ 0.38 | | |
| REDUCTION IN IX SALT | | $ -39,636 | $ -0.2750 |
| CITY OVERALL SALT COST/1000 GALLONS | $ -0.275 | | |
| **TOTAL ADDITIONAL O&M COST** | | **$ 18,716** | **$ 0.13** |
| **TOTAL ADDITIONAL O&M COST - WITH ADDITIONAL LABOR** | | **$ 45,316** | **$ 0.31** |

**CITY OF EUREKA - WELL NO. 5**
**REVERSE OSMOSIS TREATMENT EVALUATION**
**ESTIMATED IMPACT TO O&M COSTS**

**November 6, 2018**

| GENERAL INFORMATION | | | |
|---|---|---|---|
| AVE DAY WATER PRODUCTION (GAL) | | 390,748 | |
| NET ANNUAL FINISHED WATER PRODUCTION (GAL) | | 142,623,000 | |
| FINISHED/RAW % | | 81.0% | |
| ANNUAL RAW FLOW (GAL) | | 176,077,778 | |
| BLEND RATIO (% RO FEED) | | 23.0% | |
| ANNUAL RO FEED (GAL) | | 135,579,889 | |
| ANNUAL RO BYPASS (GAL) | | 40,497,889 | |
| FINISHED WATER FLOW RATE (GPM) | | 856 | |
| HOURS OF OPERATION PER AVE DAY | | 7.6 | |
| ELECTRICAL COST ($/KW-HR) | | $ 0.0796 | |
| **DESCRIPTION** | **FACTORS** | **CURRENT ANNUAL $** | **COST / 1000 GAL DISTRUBUTED** |
| LABOR | | | |
| ADDITIONAL OPERATIONS LABOR FOR RO PLANT (STAFF) | 1 | $ 26,600 | $ 0.1865 |
| PORTION DEDICATED TO THIS PLANT (1/5) | 20% | | |
| LABOR COST (SALARY + FRINGES | $ 133,000 | | |
| AERATION (IN-TANK) | | $ 0 | $ 0.0000 |
| HORSEPOWER DRAW | 17.0 | | |
| HOURS OF OPERATION PER DAY | - | | |
| KW-HR PER YEAR | - | | |
| AERATION (INUCED DRAFT) | | $ 82 | $ 0.0006 |
| HORSEPOWER DRAW | 0.5 | | |
| HOURS OF OPERATION PER DAY | 7.6 | | |
| KW-HR PER YEAR | 1,035.79 | | |
| HEATING / AIR CONDITIONING IN NEW BLDG | | $ 0 | $ 0.0000 |
| TREATMENT BUILDING AREA (SQ FT) | - | | |
| $/YR PER SQ FT | 2.5 | | |
| ADDITIONAL PUMPING COST | | $ 13,559 | $ 0.0951 |
| ADDITIONAL PUMPING HEAD: CARTRIDGE FILTERS + RO SYSTEM (FT) | 300 | | |
| OVERALL PUMPING EFFICIENCY | 0.75 | | |
| KW-HR PER YEAR | 170,341 | | |
| MEMBRANE MODULE REPLACEMENT (RO) | | $ 15,429 | $ 0.1082 |
| COST PER MODULE | $ 750 | | |
| NUMBER OF SKIDS | 1.00 | | |
| NUMBER OF MODULES PER SKID | 144.00 | | |
| ESTIMATED LIFE OF MODULE (YR) | 7.00 | | |
| CHEMICAL CLEANING RO FILTERS | | $ 1,000 | $ 0.0070 |
| COST PER CLEANING | $ 1,000 | | |
| NUMBER OF SKIDS | 1.00 | | |
| CLEANINGS PER YEAR PER SKID (1 EVERY 12 MONTHS) | 1.00 | | |
| CARTRIDGE FILTER REPLACEMENT | | $ 4,200 | $ 0.0294 |
| FEQUENCY PER YEAR | 12 | | |
| NUMBER FILTER HOUSING | 1 | | |
| NUMBER OF FILTERS PER HOUSING | 25 | | |
| COST PER FILTER | $ 14 | | |
| ANTISCALANT (Vitec 4000) | | $ 16,961 | $ 0.1189 |
| DOSAGE (MG/L) | 3.0 | | |
| LB/YEAR | 3,392 | | |
| COST PER LB | $5.00 | | |
| CAUSTIC SODA (NaOH, 30% SOLUTION) | | $ 18,096 | $ 0.1269 |
| DOSAGE (MG/L) AS 100% | 12.0 | | |
| LB/YEAR | 14,274 | | |
| LBS NaOH / GAL SOLUTION @ 30% | 3.330 | | |
| GAL/YEAR | 4,286 | | |
| LBS SOLUTION/GALLON SOLUTION | 11.1 | | |
| COST PER LB OF SOLUTION | $ 0.38 | | |
| REDUCTION IN IX SALT | | $ -39,221 | $ -0.2750 |
| CITY OVERALL SALT COST/1000 GALLONS | $ -0.275 | | |
| **TOTAL ADDITIONAL O&M COST** | | **$ 30,106** | **$ 0.21** |
| **TOTAL ADDITIONAL O&M COST - WITH ADDITIONAL LABOR** | | **$ 56,706** | **$ 0.40** |

**CITY OF EUREKA - WELL NO. 6**
**REVERSE OSMOSIS TREATMENT EVALUATION**
**ESTIMATED IMPACT TO O&M COSTS**

**November 6, 2018**

| GENERAL INFORMATION | | | |
|---|---|---|---|
| AVE DAY WATER PRODUCTION (GAL) | 362,422 | | |
| NET ANNUAL FINISHED WATER PRODUCTION (GAL) | 132,284,000 | | |
| FINISHED/RAW % | 82.0% | | |
| ANNUAL RAW FLOW (GAL) | 161,321,951 | | |
| BLEND RATIO (% RO FEED) | 28.0% | | |
| ANNUAL RO FEED (GAL) | 116,151,805 | | |
| ANNUAL RO BYPASS (GAL) | 45,170,146 | | |
| FINISHED WATER FLOW RATE (GPM) | 492 | | |
| HOURS OF OPERATION PER AVE DAY | 12.3 | | |
| ELECTRICAL COST ($/KW-HR) | $ 0.0796 | | |
| **DESCRIPTION** | **FACTORS** | **CURRENT ANNUAL $** | **COST / 1000 GAL DISTRUBUTED** |
| LABOR | | | |
| ADDITIONAL OPERATIONS LABOR FOR RO PLANT (STAFF) | 1 | $ 26,600 | $ 0.2011 |
| PORTION DEDICATED TO THIS PLANT (1/5) | 20% | | |
| LABOR COST (SALARY + FRINGES | $ 133,000 | | |
| AERATION (IN-TANK) | | $ 8,843 | $ 0.0668 |
| HORSEPOWER DRAW | 17.0 | | |
| HOURS OF OPERATION PER DAY | 24 | | |
| KW-HR PER YEAR | 111,094.32 | | |
| AERATION (INUCED DRAFT) | | $ 0 | $ 0.0000 |
| HORSEPOWER DRAW | 0.5 | | |
| HOURS OF OPERATION PER DAY | | | |
| KW-HR PER YEAR | - | | |
| HEATING / AIR CONDITIONING IN NEW BLDG | | $ 3,360 | $ 0.0254 |
| TREATMENT BUILDING AREA (SQ FT) | 1,120 | | |
| $/YR PER SQ FT | 3.0 | | |
| ADDITIONAL PUMPING COST | | $ 11,616 | $ 0.0878 |
| ADDITIONAL PUMPING HEAD: CARTRIDGE FILTERS + RO SYSTEM (FT) | 300 | | |
| OVERALL PUMPING EFFICIENCY | 0.75 | | |
| KW-HR PER YEAR | 145,932 | | |
| MEMBRANE MODULE REPLACEMENT (RO) | | $ 9,643 | $ 0.0729 |
| COST PER MODULE | $ 750 | | |
| NUMBER OF SKIDS | 1.00 | | |
| NUMBER OF MODULES PER SKID | 90.00 | | |
| ESTIMATED LIFE OF MODULE (YR) | 7.00 | | |
| CHEMICAL CLEANING RO FILTERS | | $ 1,000 | $ 0.0076 |
| COST PER CLEANING | $ 1,000 | | |
| NUMBER OF SKIDS | 1.00 | | |
| CLEANINGS PER YEAR PER SKID (1 EVERY 12 MONTHS) | 1.00 | | |
| CARTRIDGE FILTER REPLACEMENT | | $ 3,360 | $ 0.0254 |
| FEQUENCY PER YEAR | 12 | | |
| NUMBER FILTER HOUSING | 1 | | |
| NUMBER OF FILTERS PER HOUSING | 20 | | |
| COST PER FILTER | $ 14 | | |
| ANTISCALANT (Vitec 4000) | | $ 14,531 | $ 0.1098 |
| DOSAGE (MG/L) | 3.0 | | |
| LB/YEAR | 2,906 | | |
| COST PER LB | $5.00 | | |
| CAUSTIC SODA (NaOH, 30% SOLUTION) | | $ 19,582 | $ 0.1480 |
| DOSAGE (MG/L) AS 100% | 14.0 | | |
| LB/YEAR | 15,445 | | |
| LBS NaOH / GAL SOLUTION @ 30% | 3.330 | | |
| GAL/YEAR | 4,638 | | |
| LBS SOLUTION/GALLON SOLUTION | 11.1 | | |
| COST PER LB OF SOLUTION | $ 0.38 | | |
| REDUCTION IN IX SALT | | $ -36,378 | $ -0.2750 |
| CITY OVERALL SALT COST/1000 GALLONS | $ -0.275 | | |
| **TOTAL ADDITIONAL O&M COST** | | **$ 35,557** | **$ 0.27** |
| **TOTAL ADDITIONAL O&M COST - WITH ADDITIONAL LABOR** | | **$ 62,157** | **$ 0.47** |

**CITY OF EUREKA - WELL NO. 8**
**REVERSE OSMOSIS TREATMENT EVALUATION**
**ESTIMATED IMPACT TO O&M COSTS**

**November 6, 2018**

| GENERAL INFORMATION | | | |
|---|---|---|---|
| AVE DAY WATER PRODUCTION (GAL) | 301,241 | | |
| NET ANNUAL FINISHED WATER PRODUCTION (GAL) | 109,953,000 | | |
| FINISHED/RAW % | 82.0% | | |
| ANNUAL RAW FLOW (GAL) | 134,089,024 | | |
| BLEND RATIO (% RO FEED) | 27.0% | | |
| ANNUAL RO FEED (GAL) | 97,884,988 | | |
| ANNUAL RO BYPASS (GAL) | 36,204,036 | | |
| FINISHED WATER FLOW RATE (GPM) | 556 | | |
| HOURS OF OPERATION PER AVE DAY | 9.0 | | |
| ELECTRICAL COST ($/KW-HR) | $ 0.0796 | | |
| **DESCRIPTION** | **FACTORS** | **CURRENT ANNUAL $** | **COST / 1000 GAL DISTRUBUTED** |
| LABOR | | | |
| ADDITIONAL OPERATIONS LABOR FOR RO PLANT (STAFF) | 1 | $ 26,600 | $ 0.2419 |
| PORTION DEDICATED TO THIS PLANT (1/5) | 20% | | |
| LABOR COST (SALARY + FRINGES | $ 133,000 | | |
| AERATION (IN-TANK) | | $ 8,843 | $ 0.0804 |
| HORSEPOWER DRAW | 17.0 | | |
| HOURS OF OPERATION PER DAY | 24 | | |
| KW-HR PER YEAR | 111,094.32 | | |
| AERATION (INUCED DRAFT) | | $ 0 | $ 0.0000 |
| HORSEPOWER DRAW | 0.5 | | |
| HOURS OF OPERATION PER DAY | | | |
| KW-HR PER YEAR | - | | |
| HEATING / AIR CONDITIONING IN NEW BLDG | | $ 0 | $ 0.0000 |
| TREATMENT BUILDING AREA (SQ FT) | | | |
| $/YR PER SQ FT | 3.0 | | |
| ADDITIONAL PUMPING COST | | $ 9,789 | $ 0.0890 |
| ADDITIONAL PUMPING HEAD: CARTRIDGE FILTERS + RO SYSTEM (FT) | 300 | | |
| OVERALL PUMPING EFFICIENCY | 0.75 | | |
| KW-HR PER YEAR | 122,982 | | |
| MEMBRANE MODULE REPLACEMENT (RO) | | $ 11,571 | $ 0.1052 |
| COST PER MODULE | $ 750 | | |
| NUMBER OF SKIDS | 1.00 | | |
| NUMBER OF MODULES PER SKID | 108.00 | | |
| ESTIMATED LIFE OF MODULE (YR) | 7.00 | | |
| CHEMICAL CLEANING RO FILTERS | | $ 1,000 | $ 0.0091 |
| COST PER CLEANING | $ 1,000 | | |
| NUMBER OF SKIDS | 1.00 | | |
| CLEANINGS PER YEAR PER SKID (1 EVERY 12 MONTHS) | 1.00 | | |
| CARTRIDGE FILTER REPLACEMENT | | $ 3,360 | $ 0.0306 |
| FEQUENCY PER YEAR | 12 | | |
| NUMBER FILTER HOUSING | 1 | | |
| NUMBER OF FILTERS PER HOUSING | 20 | | |
| COST PER FILTER | $ 14 | | |
| ANTISCALANT (Vitec 4000) | | $ 12,245 | $ 0.1114 |
| DOSAGE (MG/L) | 3.0 | | |
| LB/YEAR | 2,449 | | |
| COST PER LB | $5.00 | | |
| CAUSTIC SODA (NaOH, 30% SOLUTION) | | $ 13,951 | $ 0.1269 |
| DOSAGE (MG/L) AS 100% | 12.0 | | |
| LB/YEAR | 11,004 | | |
| LBS NaOH / GAL SOLUTION @ 30% | 3.330 | | |
| GAL/YEAR | 3,305 | | |
| LBS SOLUTION/GALLON SOLUTION | 11.1 | | |
| COST PER LB OF SOLUTION | $ 0.38 | | |
| REDUCTION IN IX SALT | | $ -30,237 | $ -0.2750 |
| CITY OVERALL SALT COST/1000 GALLONS | $ -0.275 | | |
| **TOTAL ADDITIONAL O&M COST** | | **$ 30,523** | **$ 0.28** |
| **TOTAL ADDITIONAL O&M COST - WITH ADDITIONAL LABOR** | | **$ 57,123** | **$ 0.52** |

**CITY OF EUREKA - WELL NO. 9**
**REVERSE OSMOSIS TREATMENT EVALUATION**
**ESTIMATED IMPACT TO O&M COSTS**

**November 6, 2018**

| GENERAL INFORMATION | | | |
|---|---|---|---|
| AVE DAY WATER PRODUCTION (GAL) | | 53,000 | |
| NET ANNUAL FINISHED WATER PRODUCTION (GAL) | | 19,345,000 | |
| FINISHED/RAW % | | 100.0% | |
| ANNUAL RAW FLOW (GAL) | | 19,345,000 | |
| BLEND RATIO (% RO FEED) | | 100.0% | |
| ANNUAL RO FEED (GAL) | | 0 | |
| ANNUAL RO BYPASS (GAL) | | 19,345,000 | |
| FINISHED WATER FLOW RATE (GPM) | | 800 | |
| HOURS OF OPERATION PER AVE DAY | | 1.1 | |
| ELECTRICAL COST ($/KW-HR) | | $ 0.0796 | |
| **DESCRIPTION** | **FACTORS** | **CURRENT ANNUAL $** | **COST / 1000 GAL DISTRUBUTED** |
| LABOR | | | |
| ADDITIONAL OPERATIONS LABOR FOR RO PLANT (STAFF) | | $ 0 | $ 0.0000 |
| PORTION DEDICATED TO THIS PLANT (1/5) | 20% | | |
| LABOR COST (SALARY + FRINGES | $ 133,000 | | |
| AERATION (IN-TANK) | | $ 8,843 | $ 0.4571 |
| HORSEPOWER DRAW | 17.0 | | |
| HOURS OF OPERATION PER DAY | 24 | | |
| KW-HR PER YEAR | 111,094.32 | | |
| AERATION (INUCED DRAFT) | | $ 0 | $ 0.0000 |
| HORSEPOWER DRAW | 0.5 | | |
| HOURS OF OPERATION PER DAY | | | |
| KW-HR PER YEAR | - | | |
| HEATING / AIR CONDITIONING IN NEW BLDG | | $ 240 | $ 0.0124 |
| TREATMENT BUILDING AREA (SQ FT) | 80 | | |
| $/YR PER SQ FT | 3.0 | | |
| ADDITIONAL PUMPING COST | | $ 0 | $ 0.0000 |
| ADDITIONAL PUMPING HEAD: CARTRIDGE FILTERS + RO SYSTEM (FT) | 300 | | |
| OVERALL PUMPING EFFICIENCY | 0.75 | | |
| KW-HR PER YEAR | - | | |
| MEMBRANE MODULE REPLACEMENT (RO) | | $ 0 | $ 0.0000 |
| COST PER MODULE | $ 750 | | |
| NUMBER OF SKIDS | 1.00 | | |
| NUMBER OF MODULES PER SKID | 0.00 | | |
| ESTIMATED LIFE OF MODULE (YR) | 7.00 | | |
| CHEMICAL CLEANING RO FILTERS | | $ 0 | $ 0.0000 |
| COST PER CLEANING | $ 1,000 | | |
| NUMBER OF SKIDS | 0.00 | | |
| CLEANINGS PER YEAR PER SKID (1 EVERY 12 MONTHS) | 1.00 | | |
| CARTRIDGE FILTER REPLACEMENT | | $ 0 | $ 0.0000 |
| FEQUENCY PER YEAR | 12 | | |
| NUMBER FILTER HOUSING | 0 | | |
| NUMBER OF FILTERS PER HOUSING | 20 | | |
| COST PER FILTER | $ 14 | | |
| ANTISCALANT (Vitec 4000) | | $ 0 | $ 0.0000 |
| DOSAGE (MG/L) | 3.0 | | |
| LB/YEAR | 0 | | |
| COST PER LB | $5.00 | | |
| CAUSTIC SODA (NaOH, 30% SOLUTION) | | $ 2,045 | $ 0.1057 |
| DOSAGE (MG/L) AS 100% | 10.0 | | |
| LB/YEAR | 1,613 | | |
| LBS NaOH / GAL SOLUTION @ 30% | 3.330 | | |
| GAL/YEAR | 484 | | |
| LBS SOLUTION/GALLON SOLUTION | 11.1 | | |
| COST PER LB OF SOLUTION | $ 0.38 | | |
| REDUCTION IN IX SALT | | $ 0 | $ 0.0000 |
| CITY OVERALL SALT COST/1000 GALLONS | $ -0.275 | | |
| **TOTAL ADDITIONAL O&M COST** | | **$ 11,129** | **$ 0.58** |
| **TOTAL ADDITIONAL O&M COST - WITH ADDITIONAL LABOR** | | **$ 11,129** | **$ 0.58** |

**CITY OF EUREKA - WELL NO. 10**
**REVERSE OSMOSIS TREATMENT EVALUATION**
**ESTIMATED IMPACT TO O&M COSTS**

**November 6, 2018**

| GENERAL INFORMATION | | | |
|---|---|---|---|
| AVE DAY WATER PRODUCTION (GAL) | 219,458 | | |
| NET ANNUAL FINISHED WATER PRODUCTION (GAL) | 80,102,000 | | |
| FINISHED/RAW % | 82.0% | | |
| ANNUAL RAW FLOW (GAL) | 97,685,366 | | |
| BLEND RATIO (% RO FEED) | 27.0% | | |
| ANNUAL RO FEED (GAL) | 71,310,317 | | |
| ANNUAL RO BYPASS (GAL) | 26,375,049 | | |
| FINISHED WATER FLOW RATE (GPM) | 474 | | |
| HOURS OF OPERATION PER AVE DAY | 7.7 | | |
| ELECTRICAL COST ($/KW-HR) | $ 0.0796 | | |
| **DESCRIPTION** | **FACTORS** | **CURRENT ANNUAL $** | **COST / 1000 GAL DISTRUBUTED** |
| LABOR | | | |
| ADDITIONAL OPERATIONS LABOR FOR RO PLANT (STAFF) | 1 | $ 26,600 | $ 0.3321 |
| PORTION DEDICATED TO THIS PLANT (1/5) | 20% | | |
| LABOR COST (SALARY + FRINGES | $ 133,000 | | |
| AERATION (IN-TANK) | | $ 0 | $ 0.0000 |
| HORSEPOWER DRAW | 17.0 | | |
| HOURS OF OPERATION PER DAY | - | | |
| KW-HR PER YEAR | - | | |
| AERATION (INUCED DRAFT) | | $ 84 | $ 0.0010 |
| HORSEPOWER DRAW | 0.5 | | |
| HOURS OF OPERATION PER DAY | 7.7 | | |
| KW-HR PER YEAR | 1,050.56 | | |
| HEATING / AIR CONDITIONING IN NEW BLDG | | $ 0 | $ 0.0000 |
| TREATMENT BUILDING AREA (SQ FT) | - | | |
| $/YR PER SQ FT | 2.5 | | |
| ADDITIONAL PUMPING COST | | $ 7,132 | $ 0.0890 |
| ADDITIONAL PUMPING HEAD: CARTRIDGE FILTERS + RO SYSTEM (FT) | 300 | | |
| OVERALL PUMPING EFFICIENCY | 0.75 | | |
| KW-HR PER YEAR | 89,594 | | |
| MEMBRANE MODULE REPLACEMENT (RO) | | $ 13,500 | $ 0.1685 |
| COST PER MODULE | $ 750 | | |
| NUMBER OF SKIDS | 1.00 | | |
| NUMBER OF MODULES PER SKID | 126.00 | | |
| ESTIMATED LIFE OF MODULE (YR) | 7.00 | | |
| CHEMICAL CLEANING RO FILTERS | | $ 1,000 | $ 0.0125 |
| COST PER CLEANING | $ 1,000 | | |
| NUMBER OF SKIDS | 1.00 | | |
| CLEANINGS PER YEAR PER SKID (1 EVERY 12 MONTHS) | 1.00 | | |
| CARTRIDGE FILTER REPLACEMENT | | $ 3,360 | $ 0.0419 |
| FEQUENCY PER YEAR | 12 | | |
| NUMBER FILTER HOUSING | 1 | | |
| NUMBER OF FILTERS PER HOUSING | 20 | | |
| COST PER FILTER | $ 14 | | |
| ANTISCALANT (Vitec 4000) | | $ 8,921 | $ 0.1114 |
| DOSAGE (MG/L) | 3.0 | | |
| LB/YEAR | 1,784 | | |
| COST PER LB | $5.00 | | |
| CAUSTIC SODA (NaOH, 30% SOLUTION) | | $ 5,929 | $ 0.0740 |
| DOSAGE (MG/L) AS 100% | 7.0 | | |
| LB/YEAR | 4,676 | | |
| LBS NaOH / GAL SOLUTION @ 30% | 3.330 | | |
| GAL/YEAR | 1,404 | | |
| LBS SOLUTION/GALLON SOLUTION | 11.1 | | |
| COST PER LB OF SOLUTION | $ 0.38 | | |
| REDUCTION IN IX SALT | | $ -22,028 | $ -0.2750 |
| CITY OVERALL SALT COST/1000 GALLONS | $ -0.275 | | |
| **TOTAL ADDITIONAL O&M COST** | | **$ 17,897** | **$ 0.22** |
| **TOTAL ADDITIONAL O&M COST - WITH ADDITIONAL LABOR** | | **$ 44,497** | **$ 0.56** |